INSTRUMENT CABLE SCHEDULE

		LOAD		RUN		CABLE		GLAND	CONDUCTORS					
NUMBER	SERVICE	KW	VOLT	FROM	TO	SIZE/TYPE	LENGTH(m)	ITEM NO (NOTE 2)	QTY.	SIZE(mm²)	INSULATION	VOLT	SPARE	REMARKS
K-001	24 VDC	–	–	CONTROL PANEL	FTB # KTB-1	SWA	250	52	12 PR	0.5	PVC	300	5 PR	
K-002	24 VDC	–	–	CONTROL PANEL	FTB # KTB-2	SWA	120	52	12 PR	0.5	PVC	300	8 PR	
K-004	24 VDC	–	–	CONTROL PANEL	JB1-1	SWA	105	51	3 QUAD	0.5	PVC	300	1 QUAD	ISLAND-1
K-005	24 VDC	–	–	CONTROL PANEL	JB1-2	SWA	100	51	3 QUAD	0.5	PVC	300	1 QUAD	ISLAND-2
K-201	24 VDC	–	–	FTB # KTB-1	LI-607A	SWA	35	45	1 PR	0.88	PVC	300		
K-202	24 VDC	–	–	FTB # KTB-1	LI-618A	SWA	65	45	1 PR	0.88	PVC	300		
K-203	24 VDC	–	–	FTB # KTB-1	LI-628A	SWA	70	45	1 PR	0.88	PVC	300		
K-204	24 VDC	–	–	FTB # KTB-1	LI-105A	SWA	55	45	1 PR	0.88	PVC	300		
K-205	24 VDC	–	–	FTB # KTB-1	LI-111A	SWA	90	45	1 PR	0.88	PVC	300		
K-206	24 VDC	–	–	FTB # KTB-1	LI-201A	SWA	120	45	1 PR	0.88	PVC	300		
K-207	24 VDC	–	–	FTB # KTB-1	LI-208A	SWA	95	45	1 PR	0.88	PVC	300		
K-208	24 VDC	–	–	FTB # KTB-2	LI-304A	SWA	50	45	1 PR	0.88	PVC	300		
K-209	24 VDC	–	–	FTB # KTB-2	LI-311A	SWA	100	45	1 PR	0.88	PVC	300		
K-210	24 VDC	–	–	FTB # KTB-2	LI-505A	SWA	50	45	1 PR	0.88	PVC	300		
K-211	24 VDC	–	–	FTB # KTB-2	LI-512A	SWA	80	45	1 PR	0.88	PVC	300		
K-212	24 VDC	–	–	LI-607	LIT-607	SWA	5	45	1 PR	0.88	PVC	300		
K-213	24 VDC	–	–	LI-618A	LIT-618	SWA	5	45	1 PR	0.88	PVC	300		
K-214	24 VDC	–	–	LI-628A	LIT-628	SWA	5	45	1 PR	0.88	PVC	300		
K-215	24 VDC	–	–	LI-105A	LIT-105	SWA	15	45	1 PR	0.88	PVC	300		
K-216	24 VDC	–	–	LI-111A	LIT-111	SWA	15	45	1 PR	0.88	PVC	300		
K-217	24 VDC	–	–	LI-201A	LIT-201	SWA	10	45	1 PR	0.88	PVC	300		
K-218	24 VDC	–	–	LI-208A	LIT-208	SWA	10	45	1 PR	0.88	PVC	300		
K-219	24 VDC	–	–	LI-304	LIT-304	SWA	5	45	1 PR	0.88	PVC	300		
K-220	24 VDC	–	–	LI-311A	LIT-311	SWA	5	45	1 PR	0.88	PVC	300		
K-221	24 VDC	–	–	LI-505A	LIT-505	SWA	5	45	1 PR	0.88	PVC	300		
K-222	24 VDC	–	–	LI-512A	LIT-512	SWA	5	45	1 PR	0.88	PVC	300		

NOTES:

1. FOR CABLE GLAND SIZE, SEE DRAWING # A1-01-EE-2505.

REFERENCES

DRAWING No	DESCRIPTION

REVISIONS

No	BY	CHK	LEAD	SEC	PRJ	DATE	DESCRIPTION
3						FEB 06 1996	AS-BUILT
2	VN	IT	HL	FOD	DJ	93.05.07	REVISED – ISSUED FOR CONSTRUCTION
1	KT	IT	HL	FOD	DC	93.02.11	ISSUED FOR CONSTRUCTION
0	LF	IT	HL	FOD	SMP	92.11.23	ISSUE FOR APPROVAL

APPROVALS		DATE
DESIGN	C. TACCA	NOV 92
DRAWN	LF	NOV 92
CHECKED	I. TEDEROTT	NOV 92
LEAD	H. LESIMP	NOV 92
SECTION HEAD	F. O'DONNELL	NOV 92
PROJECT	S. PUNT	92.11.23
CLIENT		

ENGINEER STAMP

PERMIT STAMP

Propipe

Lavalin International Inc

DRAWING No

KENYA PIPELINE COMPANY LIMITED

WEST KENYA PIPELINE EXTENSION PROJECT
NAKURU TERMINAL No. 25
INSTRUMENTATION CABLE SCHEDULE
(COMMUNICATION)

JOB No 49957
ACCOUNT No 4600
SCALE NTS
REV 3

DWG. No. A1-25-EE-7304 Filename : 25EE7304

January 1991 KONTAKT

A1 841 x 594

53

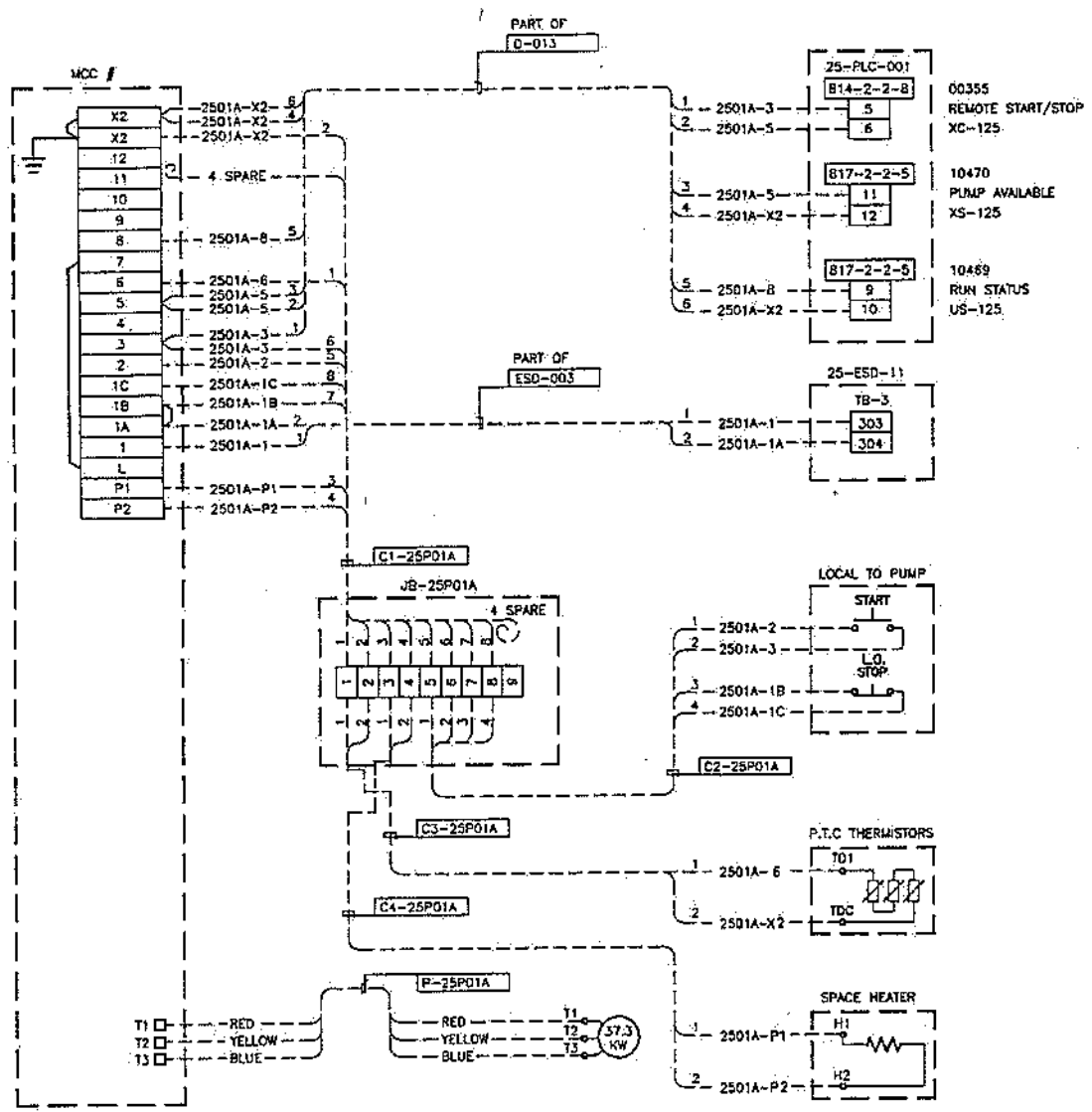

LOAD PUMP MSR 25-P-01A

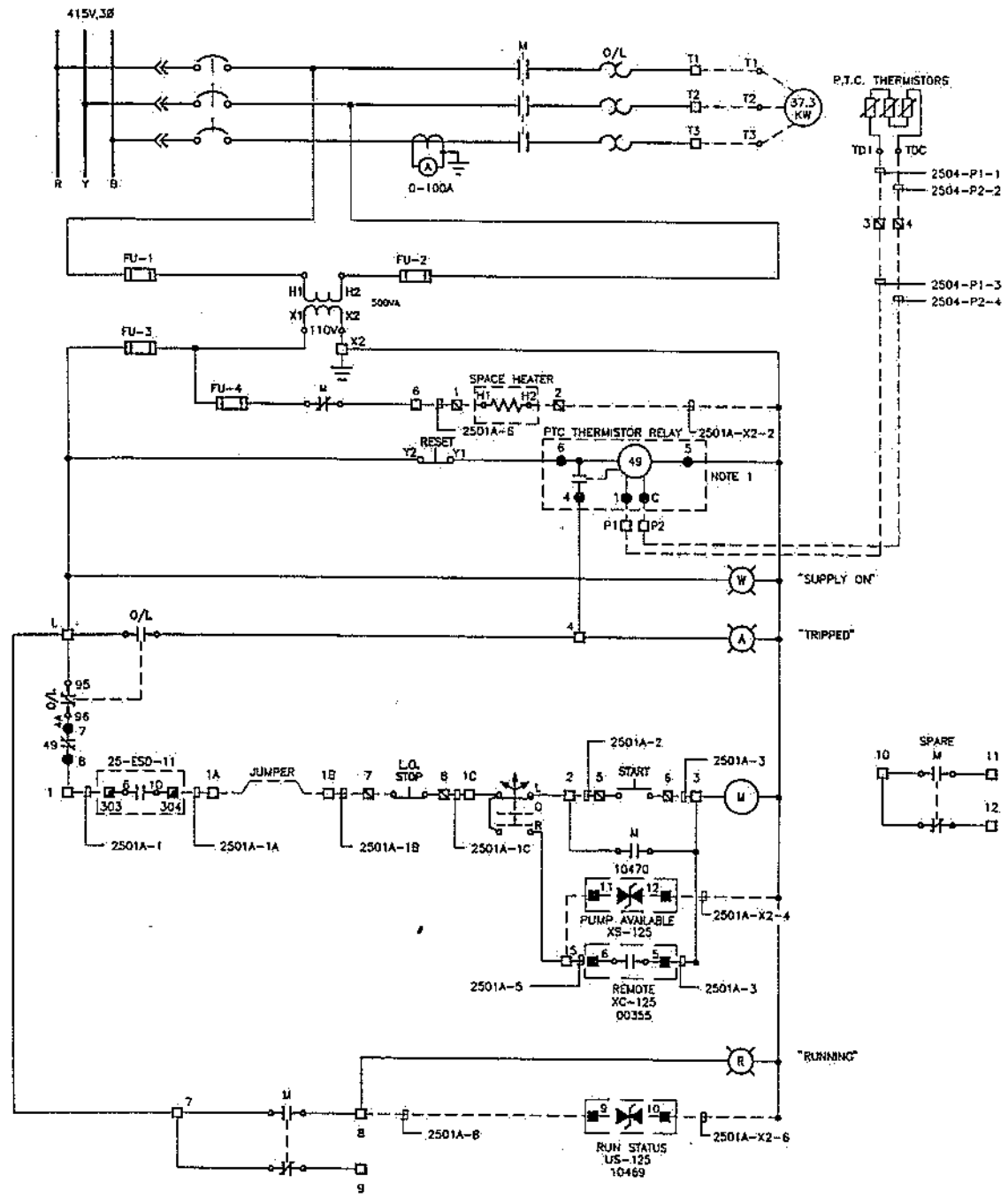

LEGEND

- MCC TERMINALS
- FIELD JUNCTION BOX TERMINALS
- ESD PANEL TERMINALS
- PLC TERMINALS
- PLC THERMISTOR RELAY TERMINALS

NOTES

1. DUE TO SPACE, PTC THERMISTOR RELAY BY TEXAS INSTRUMENT (50AA1C1A2) IS LOCATED IN POWER FACTOR CONTACTOR PANEL OF MCC.

REFERENCES		
A1-25-EE-7600	(SERIES) TERMINAL BOX WIRING DIAGRAM	
A1-25-EE-7300	(SERIES) INSTRUMENT CABLE SCHEDULE	
A1-25-EE-2102	SINGLE LINE AND SCHEMATIC SYMBOLS	
DRAWING No	DESCRIPTION	

REVISIONS No	BY	CHK	IT	HL	FOO	DC	DATE	DESCRIPTION
2							FEB 0 6 1995	AS-BUILT, REVISED
1								AS-BUILT
0	CK	IT	HL	FOO	DC	02.11.93		ISSUED FOR CONSTRUCTION

APPROVALS		DATE
DESIGN	O. SHENOY	NOV.92
DRAWN	G. KORTGAARD	FEB 93
CHECKED	I. TESEROFF	FEB 93
LEAD	H. LESKAW	FEB 93
SECTION HEAD	F. O'DONNELL	FEB 93
PROJECT	D. CERNYK	FEB 93
CLIENT		

ENGINEER STAMP

PERMIT STAMP

Propipe

Lavalin International Inc

DRAWING No

KENYA PIPELINE COMPANY LIMITED

WEST KENYA PIPELINE EXTENSION PROJECT
NAKURU TERMINAL No. 25
LOAD PUMP – MSR 25-P-01A
MOTOR SCHEMATIC AND WIRING DIAGRAM

JOB No 49957
ACCOUNT No 4600
SCALE NTS
REV 2

DWG. No. A1-25-EE-7501 Filename : 25EE7501

A1 841 x 594

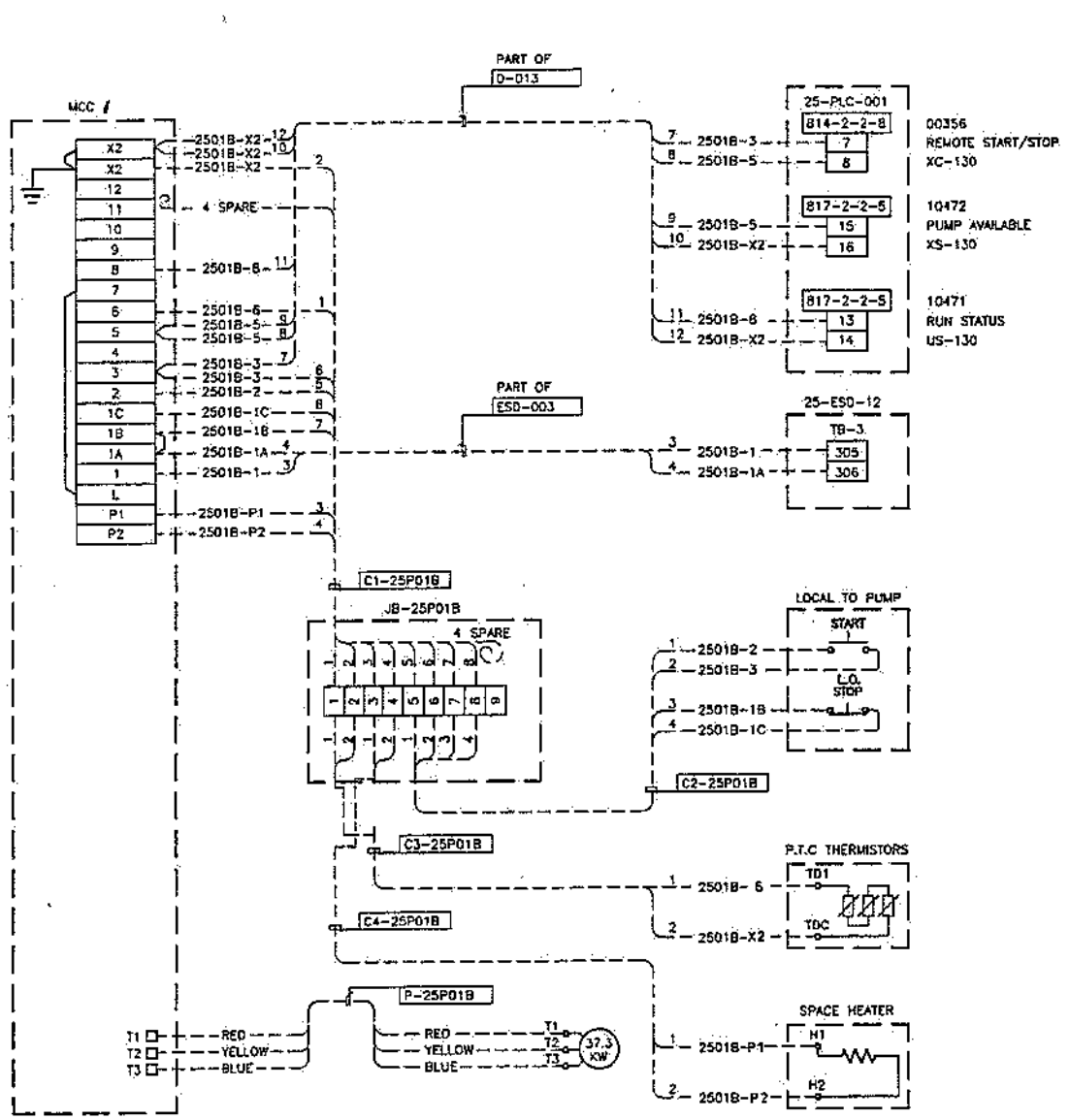

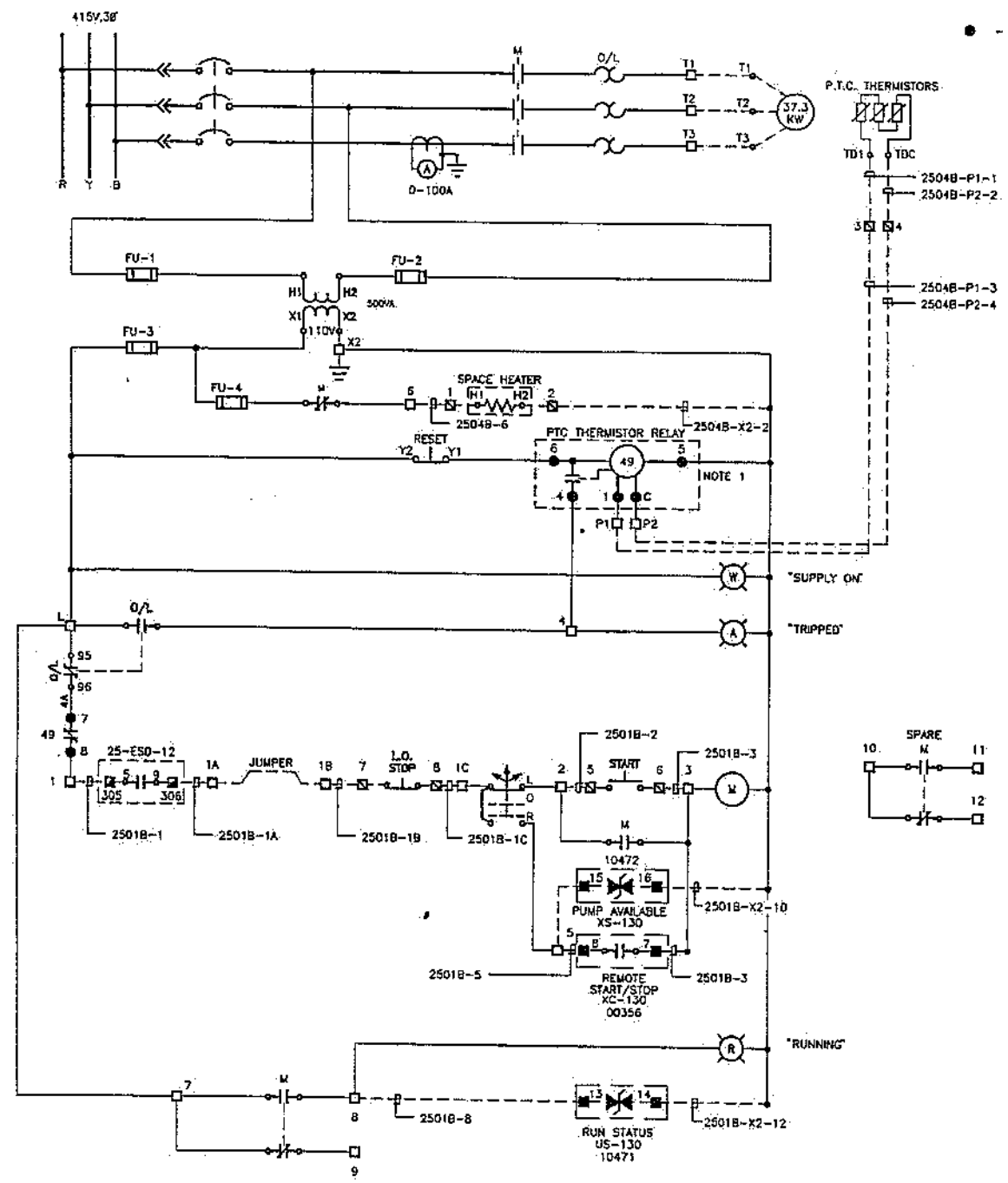

LOAD PUMP MSR 25-P-01B

LEGEND

- ☐ – MCC TERMINALS
- ☒ – FIELD JUNCTION BOX TERMINALS
- ◪ – ESD PANEL TERMINALS
- ■ – PLC TERMINALS
- ● – PTC THERMISTOR RELAY TERMINALS

NOTES

1. DUE TO SPACE, PTC THERMISTOR RELAY BY TEXAS INSTRUMENT (50AA1C1A2) IS LOCATED IN POWER FACTOR CONTACTOR PANEL OF MCC.

REFERENCES		REVISIONS									
A1-25-EE-7600	(SERIES) TERMINAL BOX WIRING DIAGRAM	2							FEB 06 1995	AS-BUILT, REVISED	
A1-25-EE-7300	(SERIES) INSTRUMENT CABLE SCHEDULE	1								AS-BUILT	
A1-01-EE-2102	SINGLE LINE AND SCHEMATIC SYMBOLS	0	GK	IT	HL	FDO	DC	93.02.11		ISSUED FOR CONSTRUCTION	
DRAWING No	DESCRIPTION	No	BY	CHK	LEAD	SEC	PRJ	DATE		DESCRIPTION	

			APPROVALS	DATE
DESIGN	D. SHENOY	NOV 92		
DRAWN	G. NORTGARD	FEB 93		
CHECKED	J. TEDENOY	FEB 93		
LEAD	H. LEGAW	FEB 93		
SECTION HEAD	F. O'DONNELL	FEB 93		
PROJECT	D. CERNIK	FEB 93		
CLIENT				

ENGINEER STAMP

PERMIT STAMP

Propipe

Lavalin International Inc

DRAWING No

KENYA PIPELINE COMPANY LIMITED

WEST KENYA PIPELINE EXTENSION PROJECT
NAKURU TERMINAL No. 25
LOAD PUMP – MSR 25-P-01B
MOTOR SCHEMATIC AND WIRING DIAGRAM

JOB No 49957
ACCOUNT No 4600
SCALE NTS
REV 2

DWG. No. A1-25-EE-7502 Filename : 25EE7502

A1 841 x 594

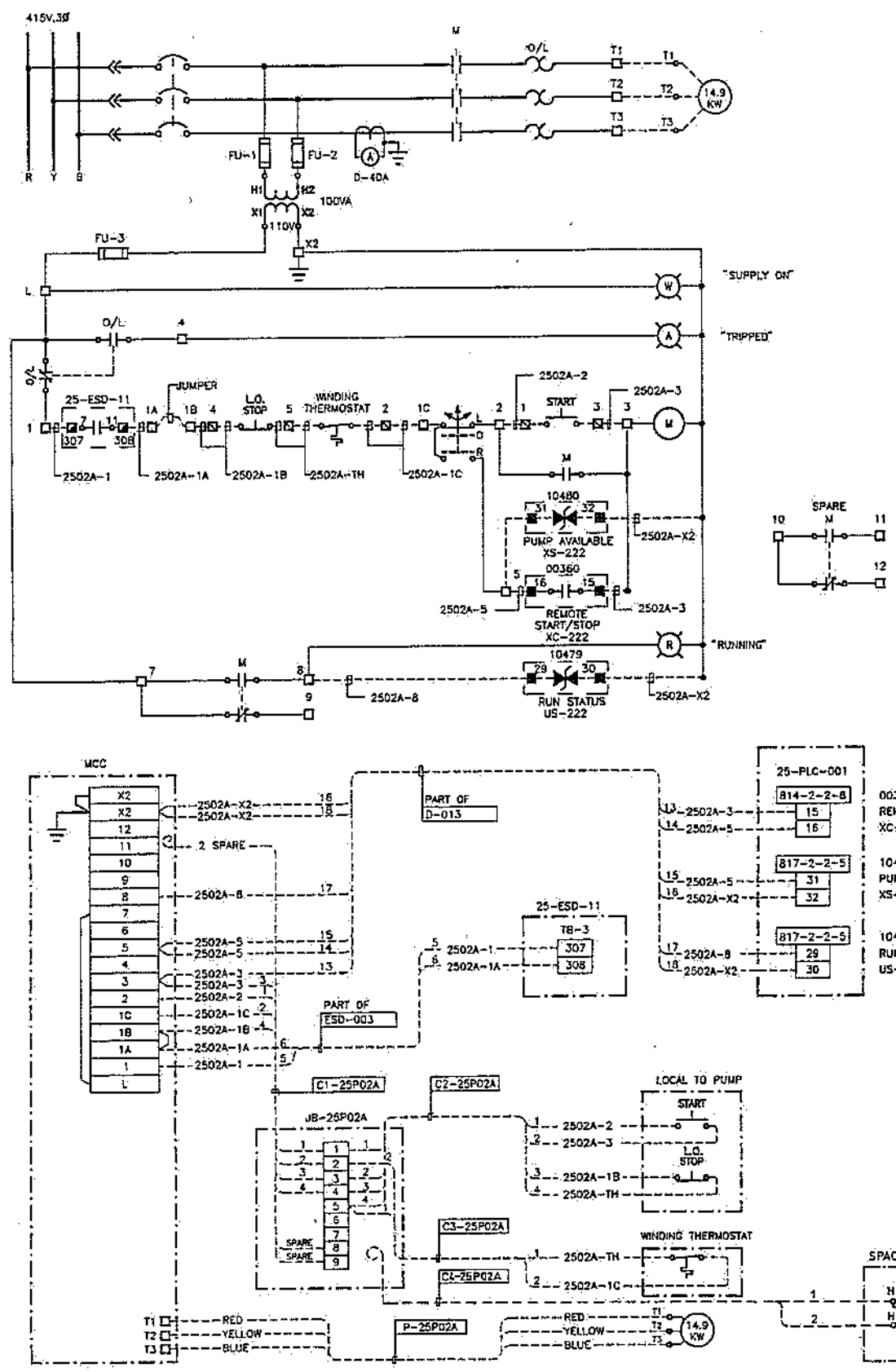

LOAD PUMP MSP 25-P-02A

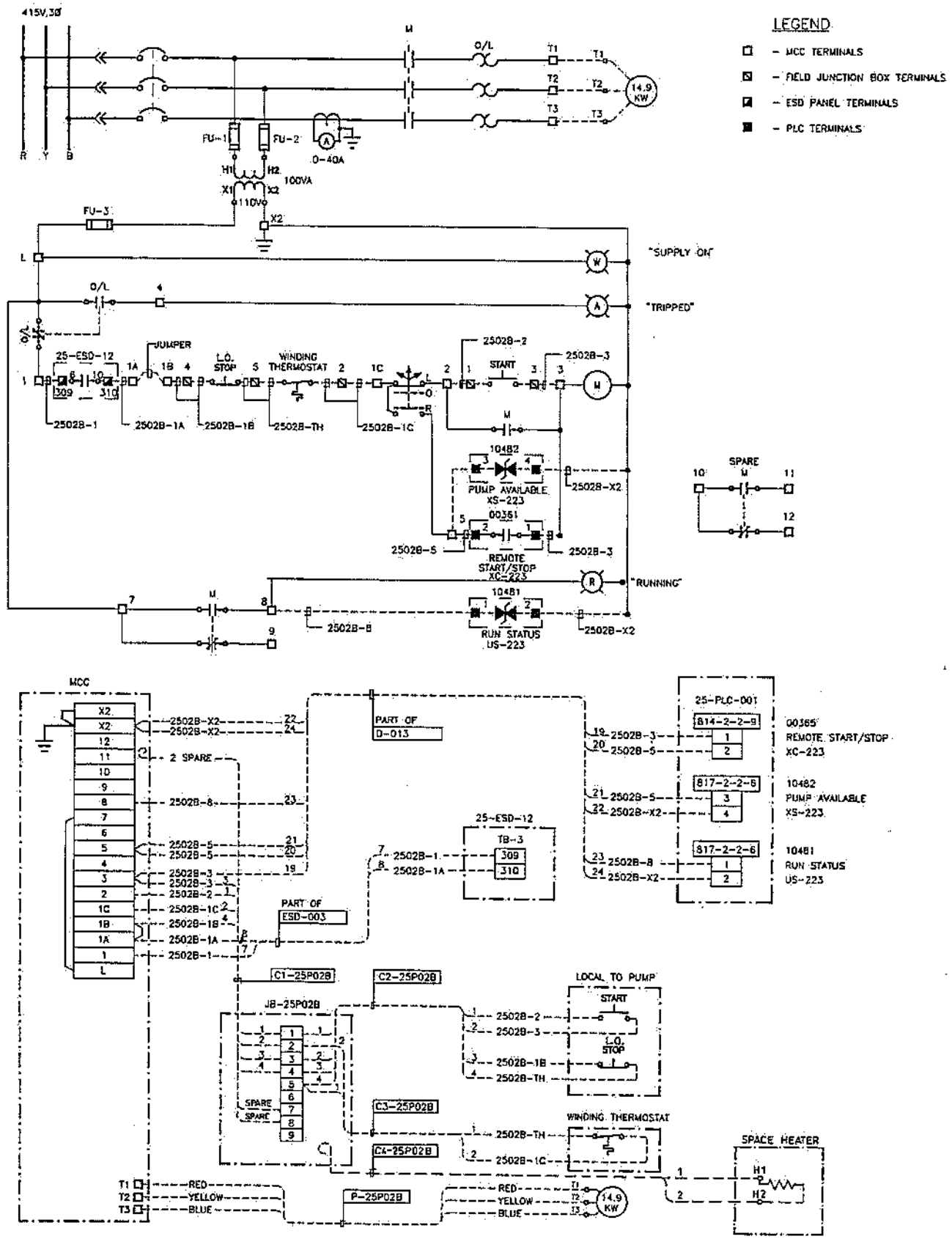

LOAD PUMP MSP 25-P-02B

REFERENCES		REVISIONS								
A1-25-EE-7600	(SERIES) TERMINAL BOX WIRING DIAGRAM	2						96/06 FEB 08 1996	AS-BUILT, REVISED	
A1-25-EE-7300	(SERIES) INSTRUMENT CABLE SCHEDULE	1							AS-BUILT	
A1-01-EE-2102	SINGLE LINE AND SCHEMATIC SYMBOLS	0.	CK	IT	HL	FOB	DC	93.04.11	ISSUED FOR CONSTRUCTION	
DRAWING No	DESCRIPTION	No	BY	CHK	LEAD	SEC	PRJ	DATE	DESCRIPTION	

APPROVALS		DATE
DESIGN	D. SHEHOV	NOV 92
DRAWN	G. KORTGAARD	NOV 92
CHECKED	I. TEDEROFF	FEB 93
LEAD	H. LESKAW	FEB 93
SECTION HEAD	T. O'DONNELL	FEB 93
PROJECT	D. CERYK	FEB 93
CLIENT		

ENGINEER STAMP

PERMIT STAMP

Propipe

Invalin International Inc.

DRAWING No

KENYA PIPELINE COMPANY LIMITED

WEST KENYA PIPELINE EXTENSION PROJECT
NAKURU TERMINAL No. 25
LOAD PUMP – MSR 25-P-02A/02B
MOTOR SCHEMATIC AND WIRING DIAGRAM

JOB No 49957
ACCOUNT No 4600
SCALE NTS
REV 2

DWG. No. A1-25-EE-7503 Filename : 25EE7503

A1 841 x 594

January 1991 KENYAA

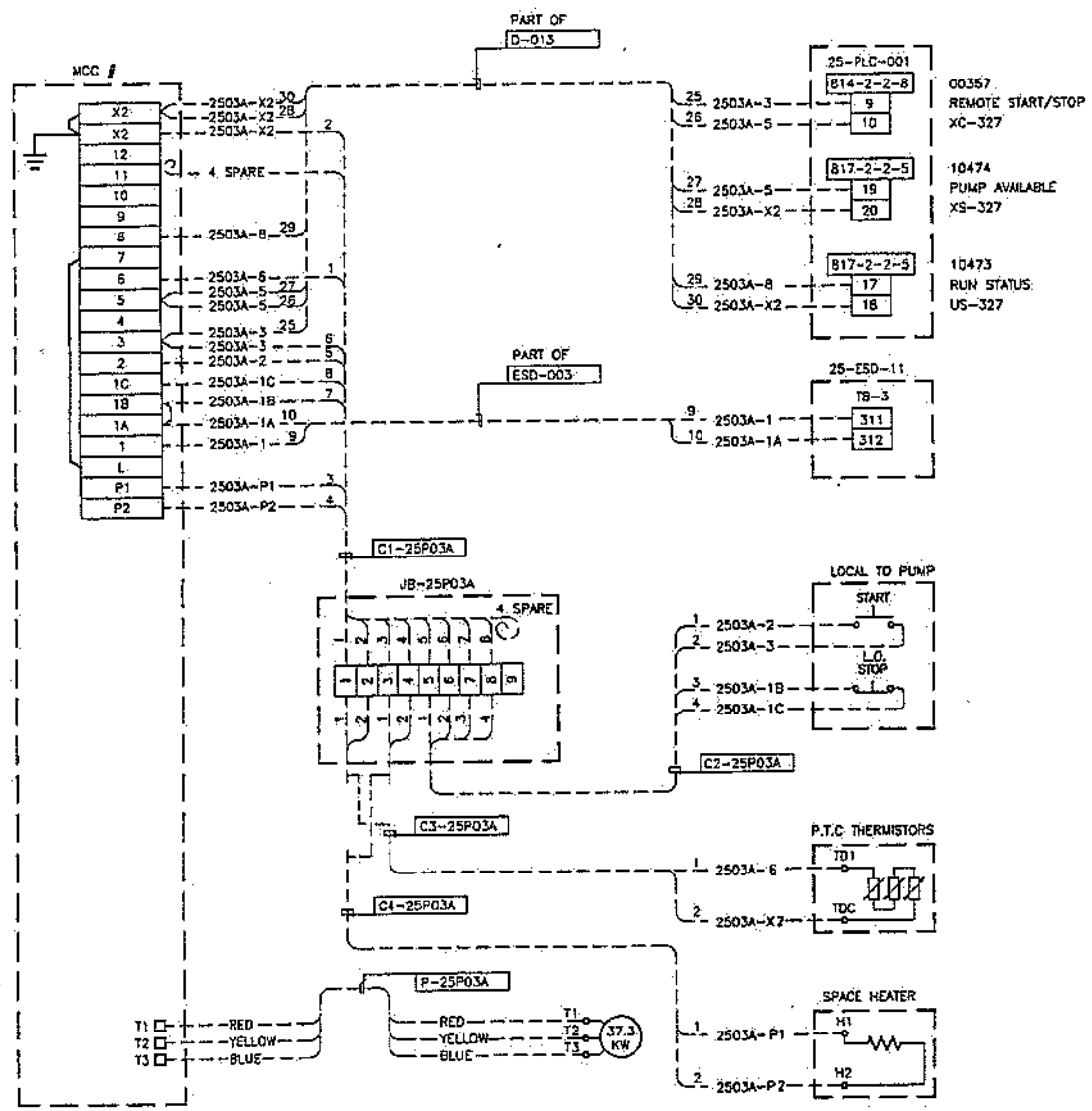

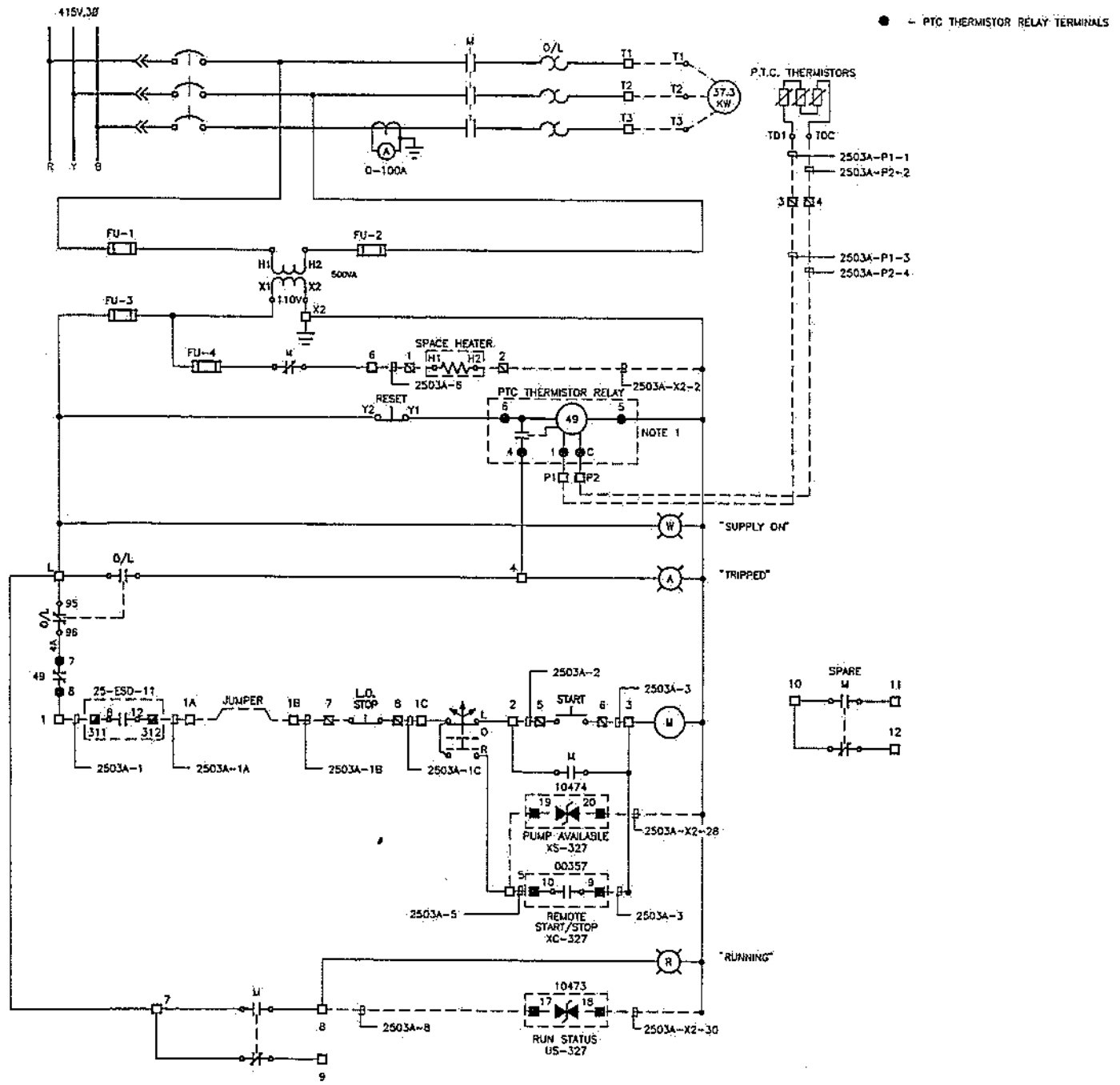

LOAD PUMP AGO 25-P-03A

LEGEND

- □ – MCC TERMINALS
- ▨ – FIELD JUNCTION BOX TERMINALS
- ◪ – ESD PANEL TERMINALS
- ■ – PLC TERMINALS
- ● – PTC THERMISTOR RELAY TERMINALS

NOTES

1. DUE TO SPACE, PTC THERMISTOR RELAY BY TEXAS INSTRUMENT (50AA1C1A2) IS LOCATED IN POWER FACTOR CONTACTOR PANEL OF MCC.

REFERENCES	
A1-25-EE-7600	(SERIES) TERMINAL BOX WIRING DIAGRAM
A1-25-EE-7300	(SERIES) INSTRUMENT CABLE SCHEDULE
A1-01-EE-2102	SINGLE LINE AND SCHEMATIC SYMBOLS
DRAWING No	DESCRIPTION

REVISIONS								
2							FEB 06 1996	AS-BUILT, REVISED
1								AS-BUILT
0.	GK	IT	HL	FOO	DC		93.02.11	ISSUED FOR CONSTRUCTION
No	BY	CHK	LEAD	SEC	PRJ		DATE	DESCRIPTION

APPROVALS		DATE
DESIGN	D. SHEMOY	NOV.92
DRAWN	O. KORTGAARD	FEB.93
CHECKED	I. TEDESKY	FEB.93
LEAD	H. LEDOM	FEB.93
SECTION HEAD	F. O'DONNELL	FEB.93
PROJECT	D. CERVYK	FEB.93
CLIENT		

ENGINEER STAMP

PERMIT STAMP

Propipe

Linvalin International Inc

DRAWING No

KENYA PIPELINE COMPANY LIMITED

WEST KENYA PIPELINE EXTENSION PROJECT
NAKURU TERMINAL No. 25
LOAD PUMP – AGO 25-P-03A
MOTOR SCHEMATIC AND WIRING DIAGRAM

JOB No 49957
ACCOUNT No 4600
SCALE NTS
REV 2

DWG. No. A1-25-EE-7504 Filename : 25EE7504

A1 841 x 594

January 1991 KENYAA1

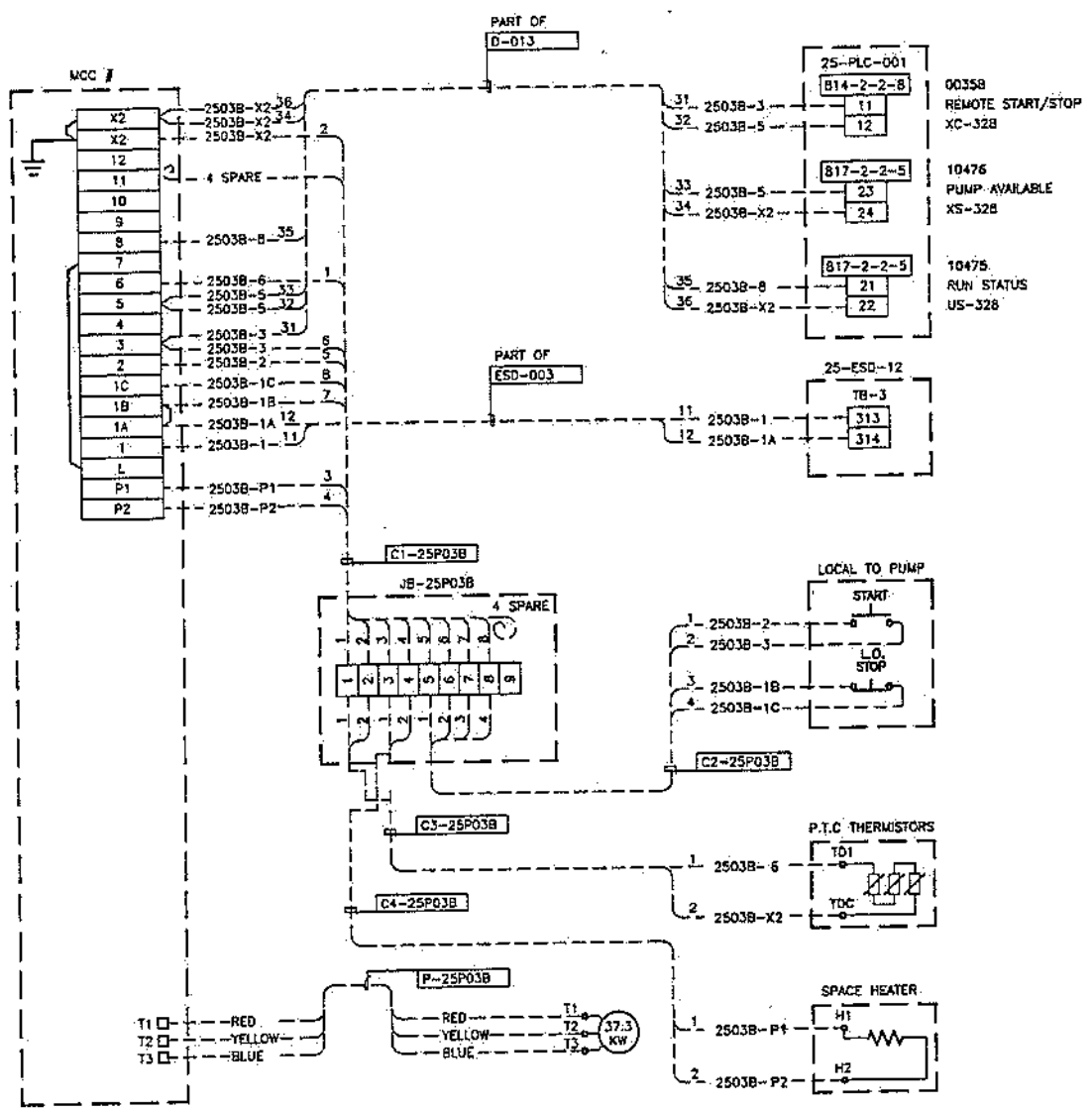

LOAD PUMP AGO 25-P-03B

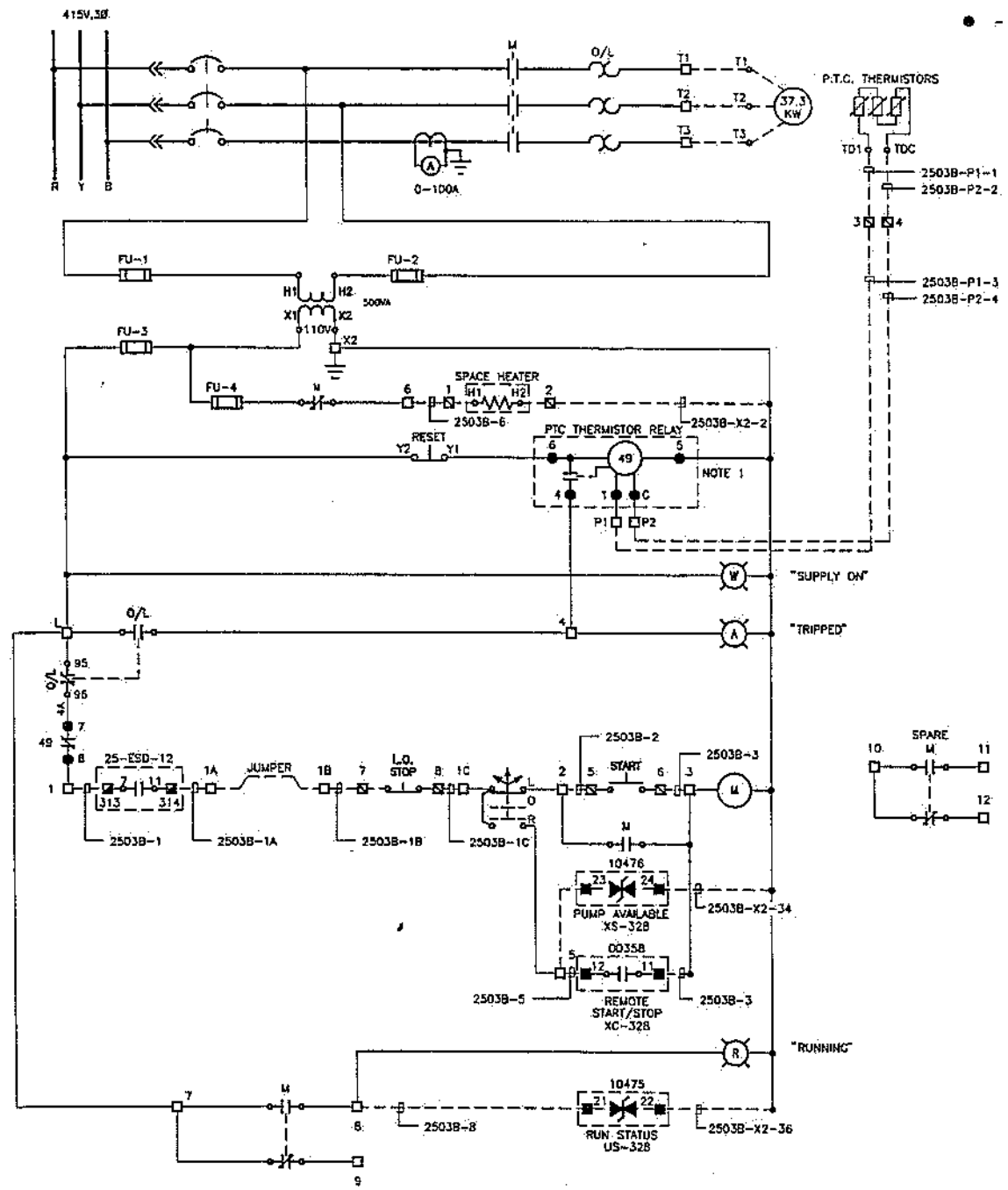

LEGEND

- MCC TERMINALS
- FIELD JUNCTION BOX TERMINALS
- ESD PANEL TERMINALS
- PLC TERMINALS
- PTC THERMISTOR RELAY TERMINALS

NOTES

1. DUE TO SPACE, PTC THERMISTOR RELAY BY TEXAS INSTRUMENT (S0AA1C1A2) IS LOCATED IN POWER FACTOR CONTACTOR PANEL OF MCC.

REFERENCES	
A1-01-EE-7500	(SERIES) TERMINAL BOX WIRING DIAGRAM
A1-01-EE-7300	(SERIES) INSTRUMENT CABLE SCHEDULE
A1-01-EE-2102	SINGLE LINE AND SCHEMATIC SYMBOLS
DRAWING No	DESCRIPTION

REVISIONS								
2							FEB 06 1996	AS-BUILT, REVISED
1								AS-BUILT
0	GK	IT	HL	FOO	OC	PRJ	93.02.11	ISSUED FOR CONSTRUCTION
No	BY	CHK	LEAD	SEC	PRJ		DATE	DESCRIPTION

APPROVALS	DATE
DESIGN G. SHEMOY	NOV 92
DRAWN C. KORTGAARD	FEB 93
CHECKED I. TOLKOFF	FEB 93
LEAD H. LESKIW	FEB 93
SECTION HEAD E. O'DONNELL	FEB 93
PROJECT G. CERNY	FEB 93
CLIENT	

ENGINEER STAMP

PERMIT STAMP

Propipe

Lavalin International Inc

DRAWING No

KENYA PIPELINE COMPANY LIMITED

WEST KENYA PIPELINE EXTENSION PROJECT
NAKURU TERMINAL No. 25
LOAD PUMP — AGO 25-P-03B
MOTOR SCHEMATIC AND WIRING DIAGRAM

JOB No 49957
ACCOUNT No 4600
SCALE NTS
REV 2

DWG. No. A1-25-EE-7505 Filename : 25EE7505

January 1991 KENYA1

A1 841 x 594

(48)

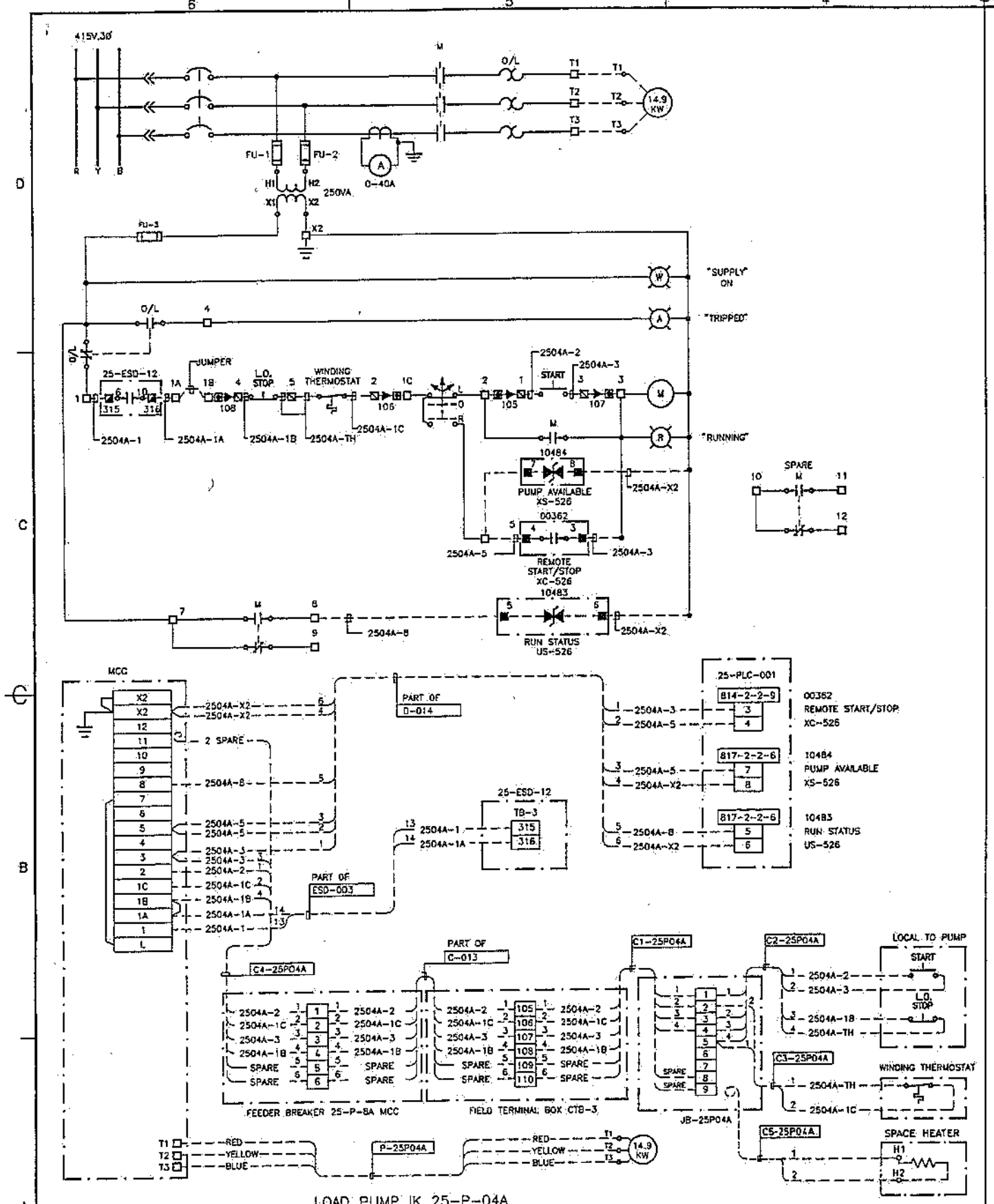

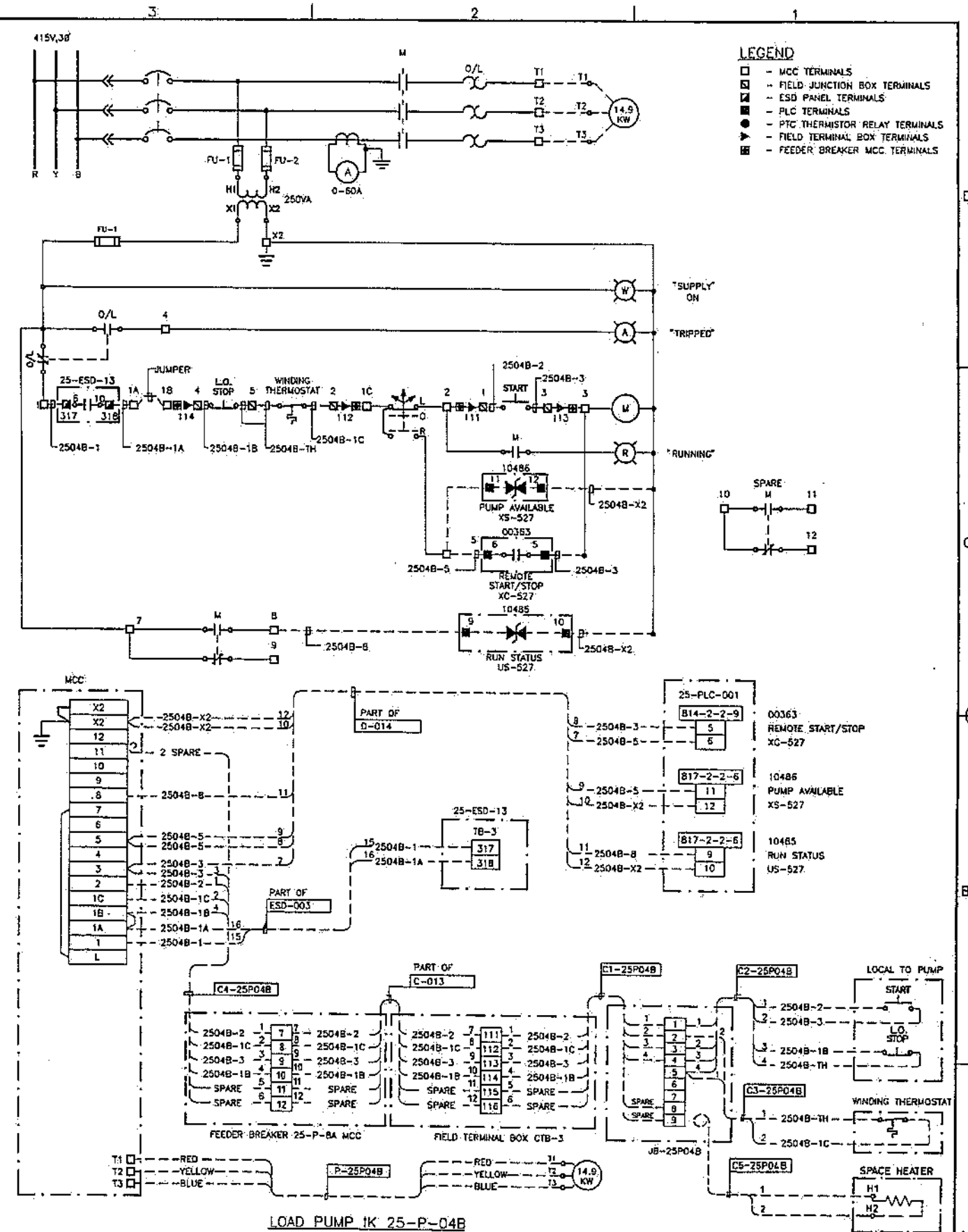

LEGEND

- □ - MCC TERMINALS
- ▨ - FIELD JUNCTION BOX TERMINALS
- ◪ - ESD PANEL TERMINALS
- ■ - PLC TERMINALS
- ● - PTC THERMISTOR RELAY TERMINALS
- ▶ - FIELD TERMINAL BOX TERMINALS
- ⊞ - FEEDER BREAKER MCC TERMINALS

DRAWING No	DESCRIPTION
A1-25-EE-7500	(SERIES) TERMINAL BOX WIRING DIAGRAM
A1-25-EE-7300	(SERIES) INSTRUMENT CABLE SCHEDULE
A1-01-EE-2102	SINGLE LINE AND SCHEMATIC SYMBOLS

REFERENCES

No	BY	CHK	LEAD	SEC	PRJ	DATE	DESCRIPTION
2						FEB 06 1996	AS-BUILT, REVISED
1							AS-BUILT
0	GK	IT	HL	FOD	DC	93.02.11	ISSUED FOR CONSTRUCTION

REVISIONS

APPROVALS	DATE
DESIGN D. SHEMOY	NOV 92
DRAWN G. KONYCHARD	FEB 93
CHECKED I. TEDEROFF	FEB 93
LEAD H. LESHIN	FEB 93
SECTION HEAD T. O'DONNELL	FEB 93
PROJECT D. CERNIK	FEB 93
CLIENT	

ENGINEER STAMP

PERMIT STAMP

Propipe

Lavalin International Inc

DRAWING No

KENYA PIPELINE COMPANY LIMITED

WEST KENYA PIPELINE EXTENSION PROJECT
NAKURU TERMINAL No. 25
LOAD PUMP – IK 25-P-04A/04B
MOTOR SCHEMATIC AND WIRING DIAGRAM

JOB No 49957
ACCOUNT No 4600
SCALE NTS
REV 2

DWG. No. A1-25-EE-7506 Filename : 25EE7506

January 1991 KENYAN

A1 841 x 594

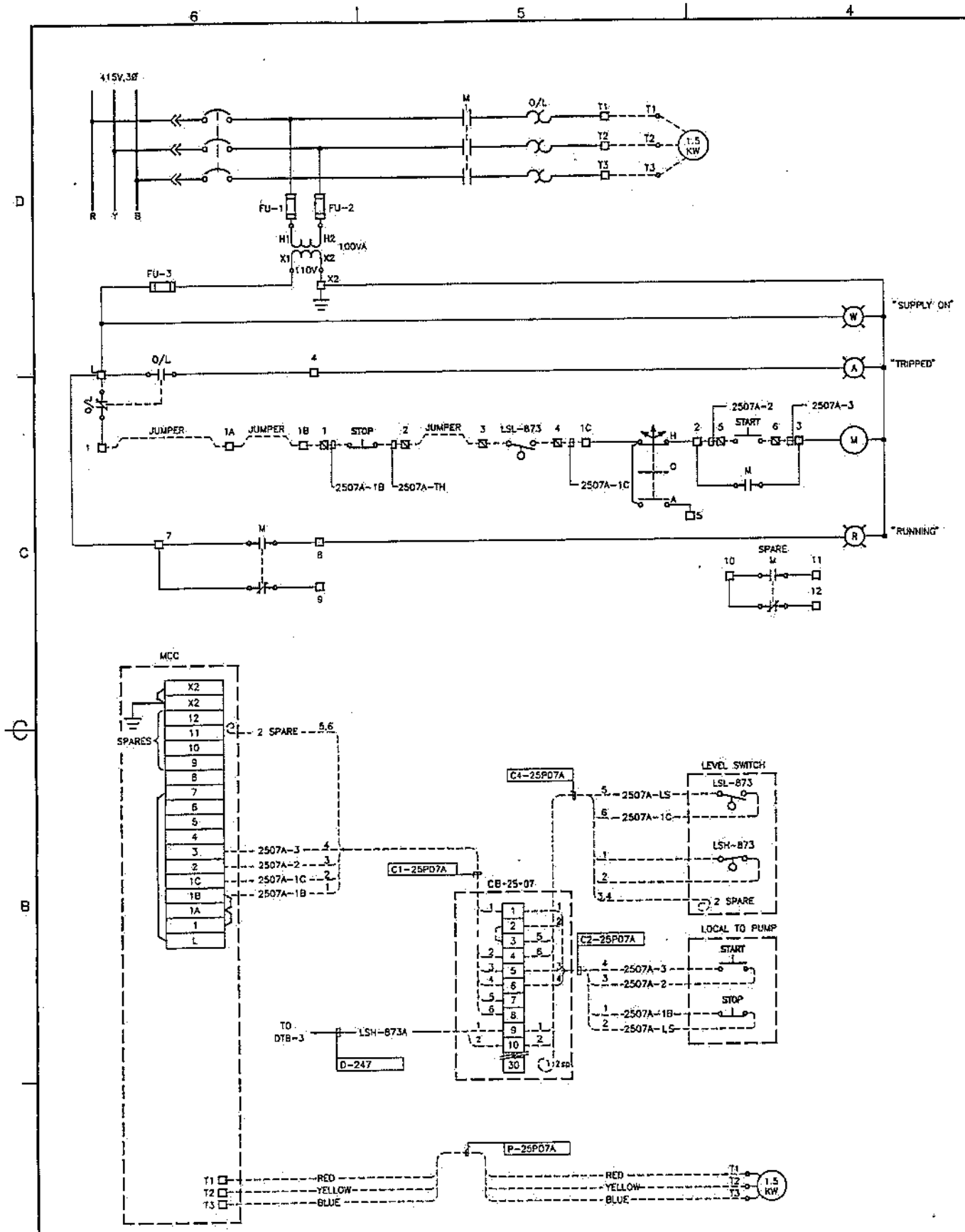

OWS OIL PUMP 25-P-07A

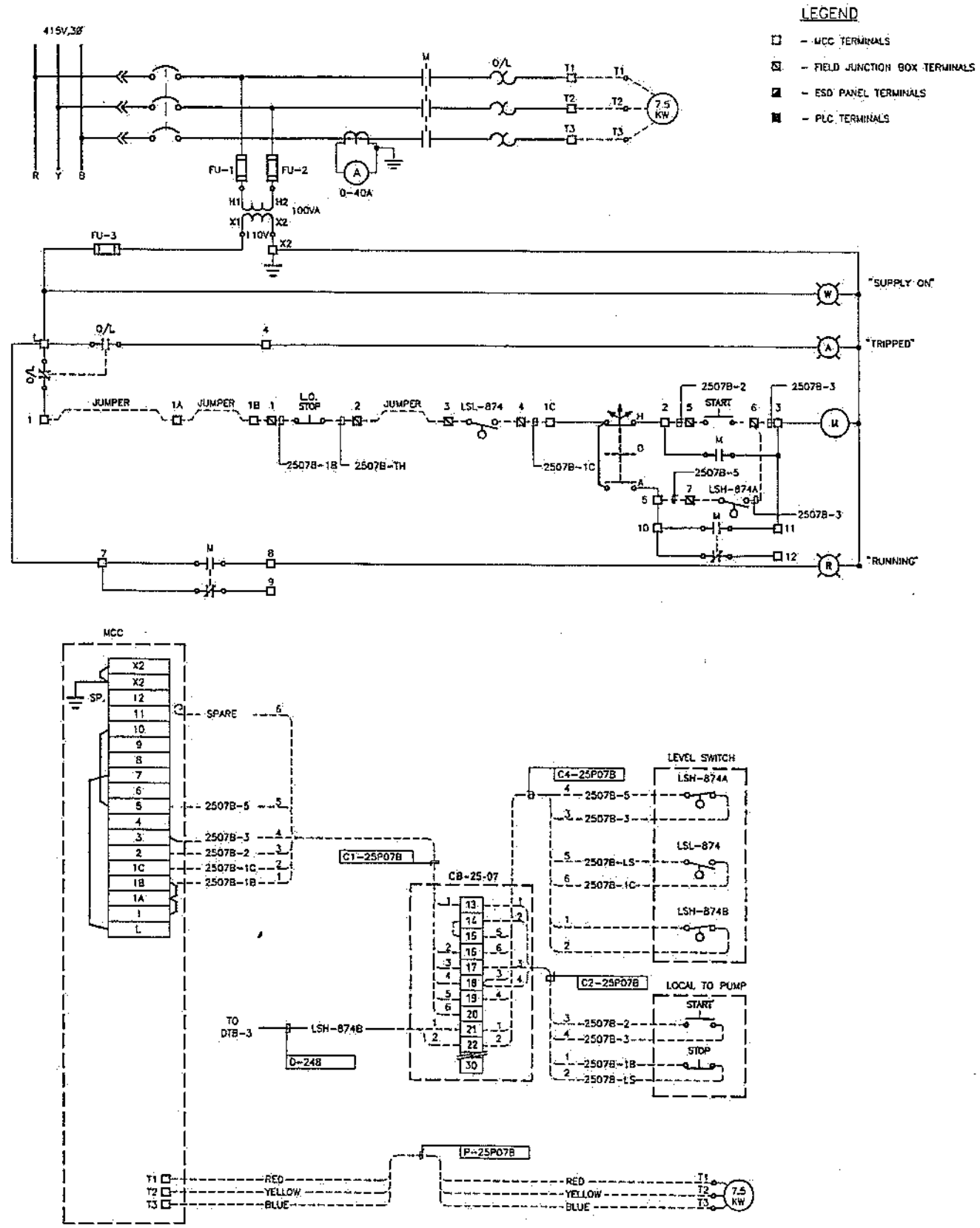

OWS WATER PUMP 25-P-07B

LEGEND

- MCC TERMINALS
- FIELD JUNCTION BOX TERMINALS
- ESD PANEL TERMINALS
- PLC TERMINALS

REFERENCES		REVISIONS										
										DESIGN B. SHENOY	NOV 87	ENGINEER STAMP
										DRAWN C. KORSGAARD	FEB 93	PERMIT STAMP
										CHECKED L. TIDEMOFF	FEB 93	
										LEAD N. LESIOW	FEB 93	
A1-25-EE-7600	(SERIES) TERMINAL BOX WIRING DIAGRAM	2						FEB 06 1996	AS-BUILT REVISED	SECTION HEAD D. CROSWELL	FEB 93	
A1-25-EE-7500	(SERIES) INSTRUMENT CABLE SCHEDULE	1							AS-BUILT	PROJECT D. CERNY	FEB 93	
A1-01-EE-2102	SINGLE LINE AND SCHEMATIC SYMBOLS	0	CK	IT	HL	FDG	DC	93.02.11	ISSUED FOR CONSTRUCTION	CLIENT		
DRAWING No	DESCRIPTION	No	BY	CHK	LEAD	SEC	PRJ	DATE	DESCRIPTION	APPROVALS	DATE	

Propipe

Lavalin International Inc

DRAWING No

KENYA PIPELINE COMPANY LIMITED

WEST KENYA PIPELINE EXTENSION PROJECT
NAKURU TERMINAL No. 25
OWS OIL/WATER PUMP 25-P-07A/B
MOTOR SCHEMATIC AND WIRING DIAGRAM

JOB No 49957
ACCOUNT No 4600
SCALE NTS
REV 2

DWG. NO. A1-25-EE-7507 Filename : 25EE7507

A1 841 x 594

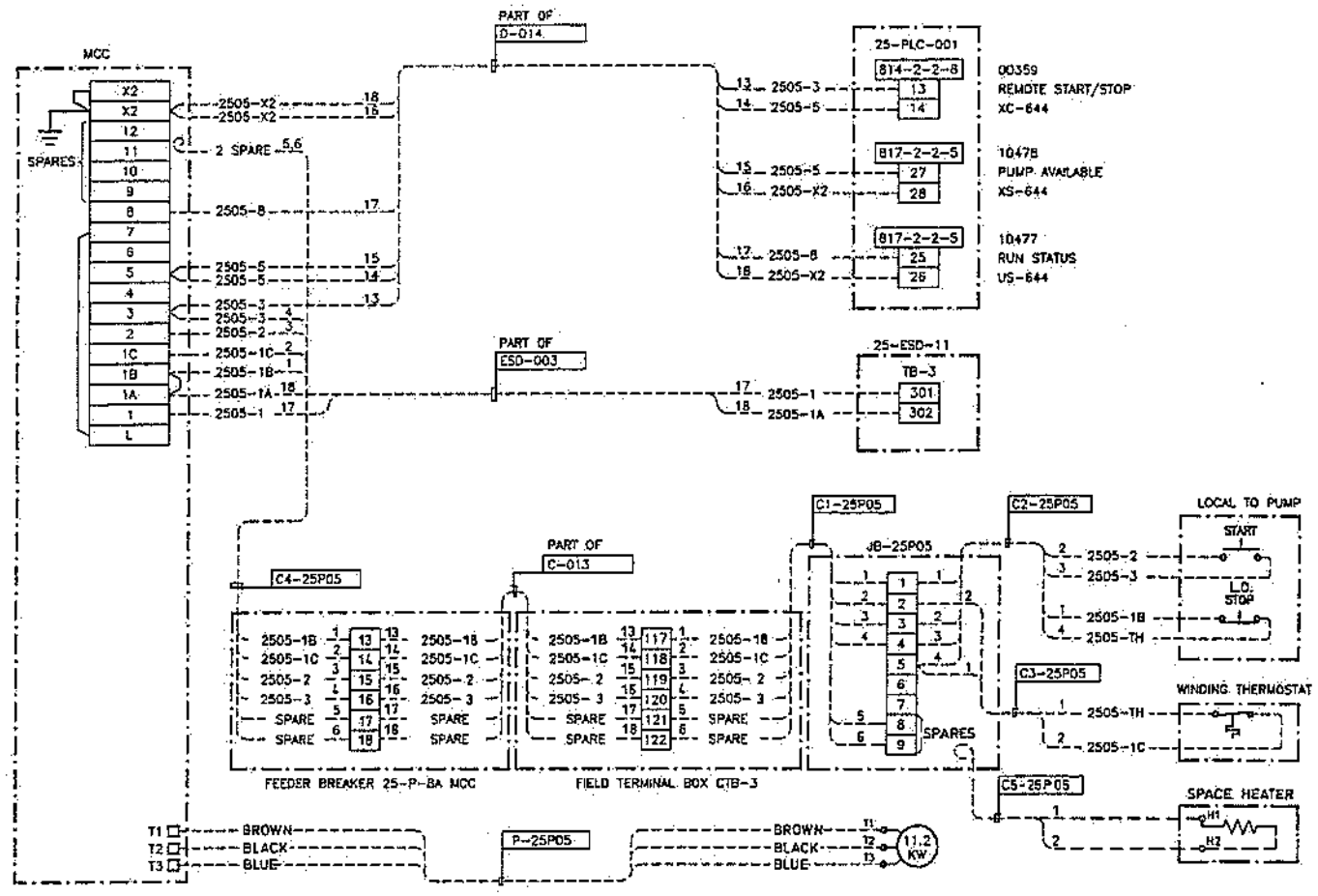

INTERFACE LOAD PUMP 25-P-05

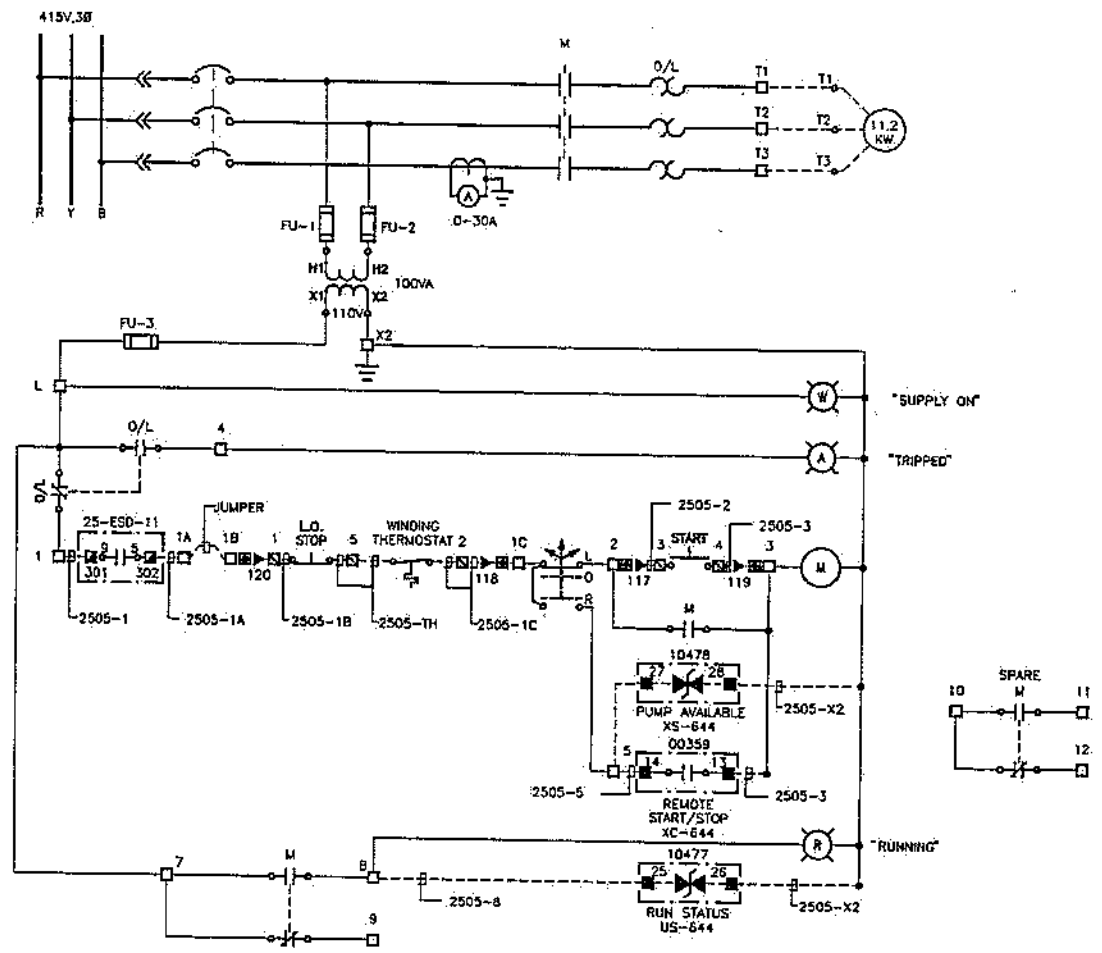

LEGEND

- MCC TERMINALS
- FIELD JUNCTION BOX TERMINALS
- ESD PANEL TERMINALS
- PLC TERMINALS
- PTC THERMISTOR RELAY TERMINALS
- FIELD TERMINAL BOX TERMINALS
- FEEDER BREAKER MCC TERMINALS

REFERENCES	
A1-25-EE-7600	(SERIES) TERMINAL BOX WIRING DIAGRAM
A1-25-EE-7300	(SERIES) INSTRUMENT CABLE SCHEDULE
A1-01-EE-2102	SINGLE LINE AND SCHEMATIC SYMBOLS
DRAWING No	DESCRIPTION

REVISIONS							
No	BY	CHK	LEAD	SEC	PRJ	DATE	DESCRIPTION
2						93.02.06	AS-BUILT, REVISED
1							AS-BUILT
0	GK	IT	HL	FOO	DC	93.02.11	ISSUED FOR CONSTRUCTION

APPROVALS		DATE
DESIGN	D. SHENOY	NOV.92
DRAWN	G. KONTOGIANNIS	FEB.93
CHECKED	I. TEDEROFF	FEB.93
LEAD	H. LESIAK	FEB.93
SECTION HEAD	F. O'DONNELL	FEB.93
PROJECT	D. CYSENYK	FEB.93
CLIENT		

ENGINEER STAMP

PERMIT STAMP

Propipe

Lavalin International Inc

DRAWING No

KENYA PIPELINE COMPANY LIMITED

WEST KENYA PIPELINE EXTENSION PROJECT
NAKURU TERMINAL No. 25
INTERFACE LOAD PUMP 25-P-05
MOTOR SCHEMATIC AND WIRING DIAGRAM

JOB No 49957
ACCOUNT No 4600
SCALE NTS
REV 2

DWG. No. A1-25-EE-7508 Filename : 25EE7508

A1.841 x 594

January 1991 NCR7445

NOTES:
1. SPARE CORES 5 AND 6 (2511B-1 AND 2511B-A)

LEGEND
- MCC TERMINALS
- FIELD JUNCTION BOX TERMINALS
- ESD PANEL TERMINALS
- PLC TERMINALS
- PTC THERMISTOR RELAY TERMINALS
- FIELD TERMINAL BOX TERMINALS
- FEEDER BREAKER MCC TERMINALS

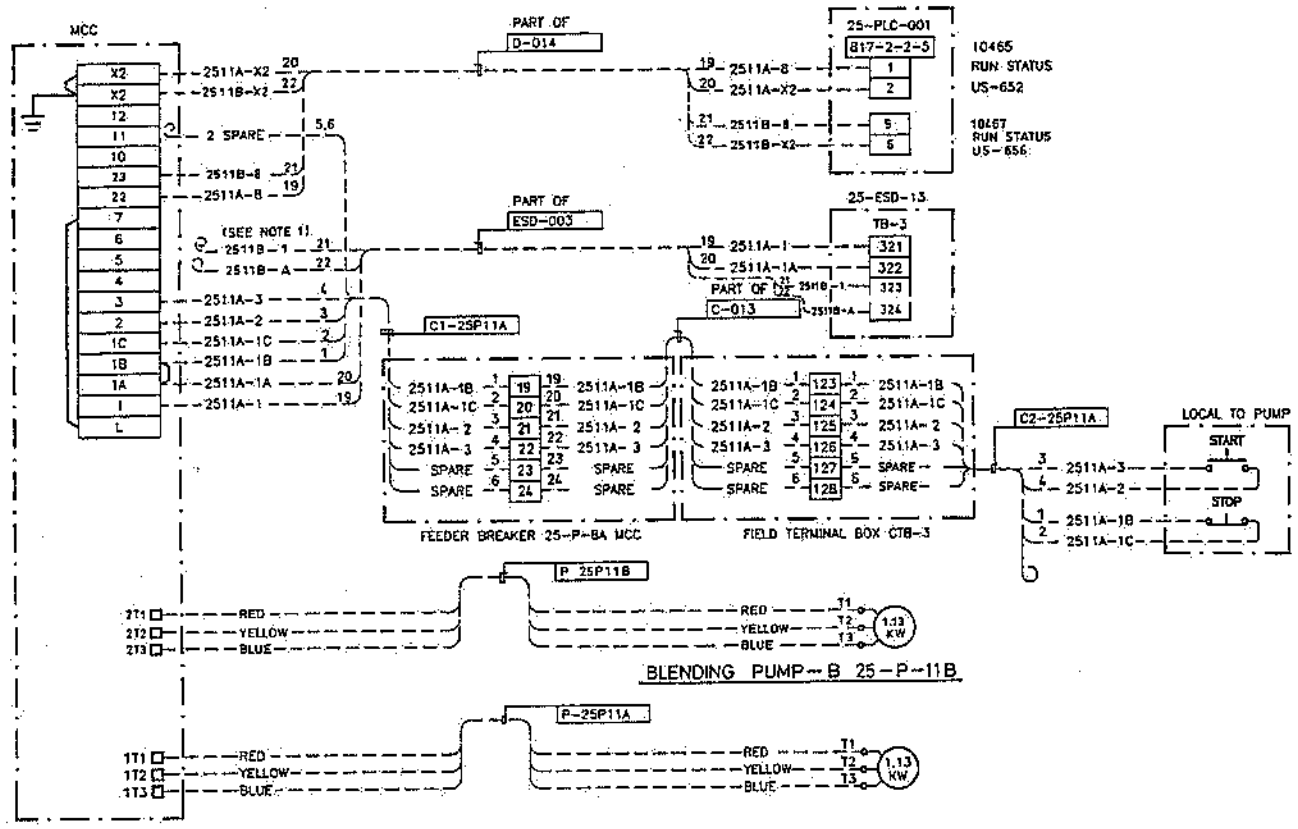

REFERENCES	
A1-25-CE-7500	(SERICS) TERMINAL BOX WIRING DIAGRAM
A1-25-EE-7300	(SERICS) INSTRUMENT CABLE SCHEDULE
A1-01-EE-2102	SINGLE LINE AND SCHEMATIC SYMBOLS
DRAWING No	DESCRIPTION

REVISIONS								
2							FEB 06	AS-BUILT REVISED
1								AS-BUILT
0	GK	JT	HL	FDO	DC	PRJ	93.02.11	ISSUED FOR CONSTRUCTION
No	BY	CHK	LEAD	SEC	PRJ		DATE	DESCRIPTION

APPROVALS		DATE
DESIGN	D. SHENOY	NOV 92
DRAWN	C. MONTGOMERY	FEB 93
CHECKED	I. TEVERSOFF	FEB 93
LEAD	H. LESSOW	FEB 93
SECTION HEAD	P. O'DONNELL	FEB 93
PROJECT	D. CERNY	FEB 93
CLIENT		

ENGINEER STAMP

PERMIT STAMP

Propipe

Lavalin International Inc

DRAWING No

KENYA PIPELINE COMPANY LIMITED

WEST KENYA PIPELINE EXTENSION PROJECT
NAKURU TERMINAL No. 25
BLENDING PUMP 25-P-11A/B
MOTOR SCHEMATIC AND WIRING DIAGRAM

JOB No 49957
ACCOUNT No 4600
SCALE NTS
REV 2

DWG. No. A1-25-EE-7509 Filename : 25EE7509

A1 841 x 594

January 1991 KENYAN

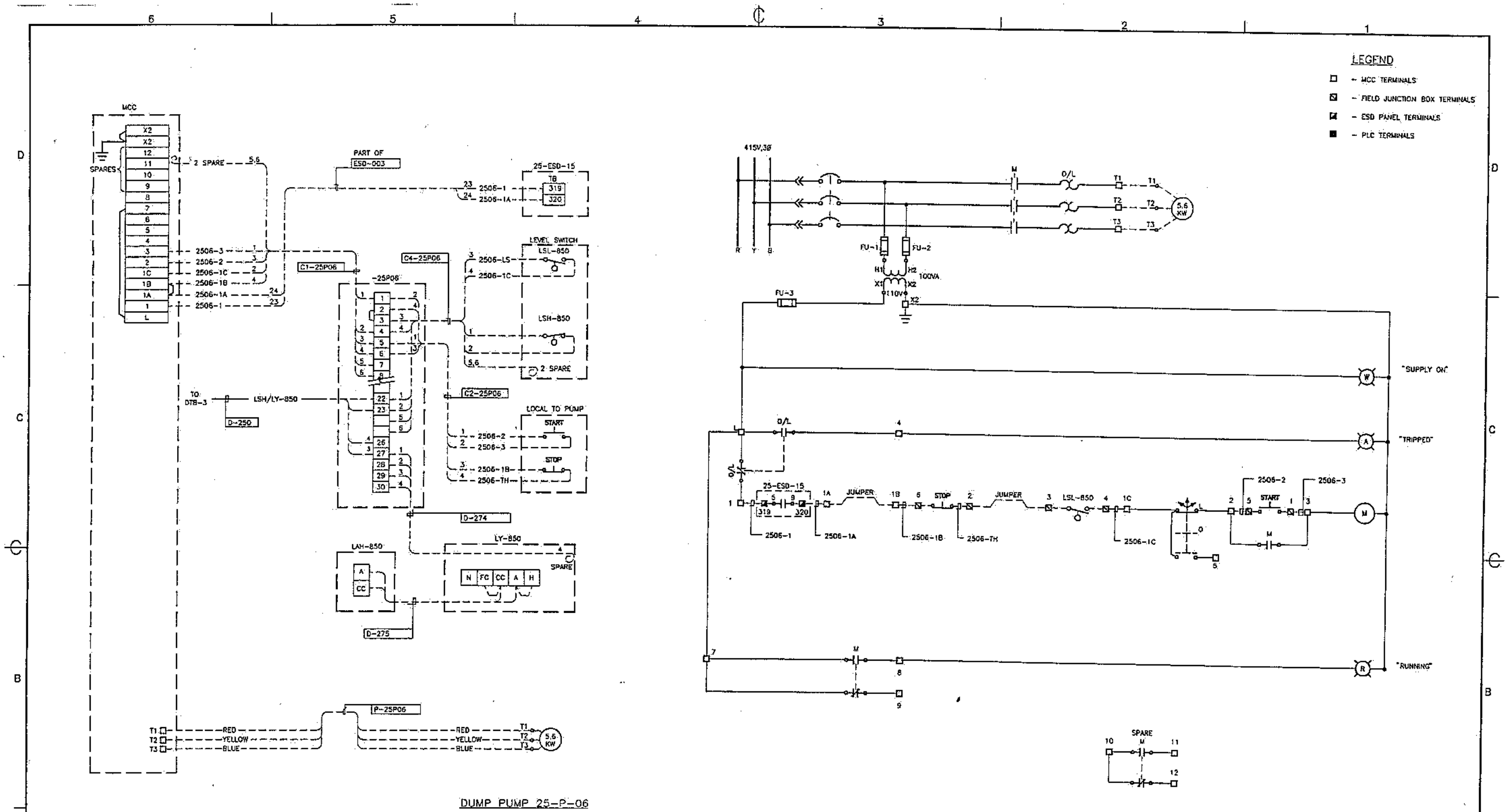

DUMP PUMP 25-P-06

DRAWING No	DESCRIPTION
A1-25-EE-7600	(SERIES) TERMINAL BOX WIRING DIAGRAM
A1-25-EE-7300	(SERIES) INSTRUMENT CABLE SCHEDULE
A1-01-EE-2102	SINGLE LINE AND SCHEMATIC SYMBOLS

REFERENCES

No	BY	CHK	LEAD	SEC	PRJ	DATE	DESCRIPTION
3						FEB 06 '95	AS-BUILT, REVISED
2							AS-BUILT
1	VN	IT	HL	FOD	DJ	93.05.07	REVISED - ISSUED FOR CONSTRUCTION
0	CK	IT	HL	FOD	DC	93.02.11	ISSUED FOR CONSTRUCTION

REVISIONS

APPROVALS	DATE
DESIGN B. SHOKOY	NOV 92
DRAWN G. KORTGARD	FEB 93
CHECKED J. TERCROFT	FEB 93
LEAD H. LESKOW	FEB 93
SECTION MGR. F. O'DONNELL	FEB 93
PROJECT D. CERNIK	93.02.11
CLIENT	

ENGINEER STAMP

PERMIT STAMP

Propipe

Lavalin International Inc

DRAWING No

KENYA PIPELINE COMPANY LIMITED

WEST KENYA PIPELINE EXTENSION PROJECT
NAKURU TERMINAL No. 25
DUMP PUMP 25-P-06
MOTOR SCHEMATIC AND WIRING DIAGRAM

JOB No 49957
ACCOUNT No 4600
SCALE NTS
REV 3

DWG. No. A1-25-EE-7510 Filename : 25EE7510

A1 841 x 594

January 1991 KENWALT

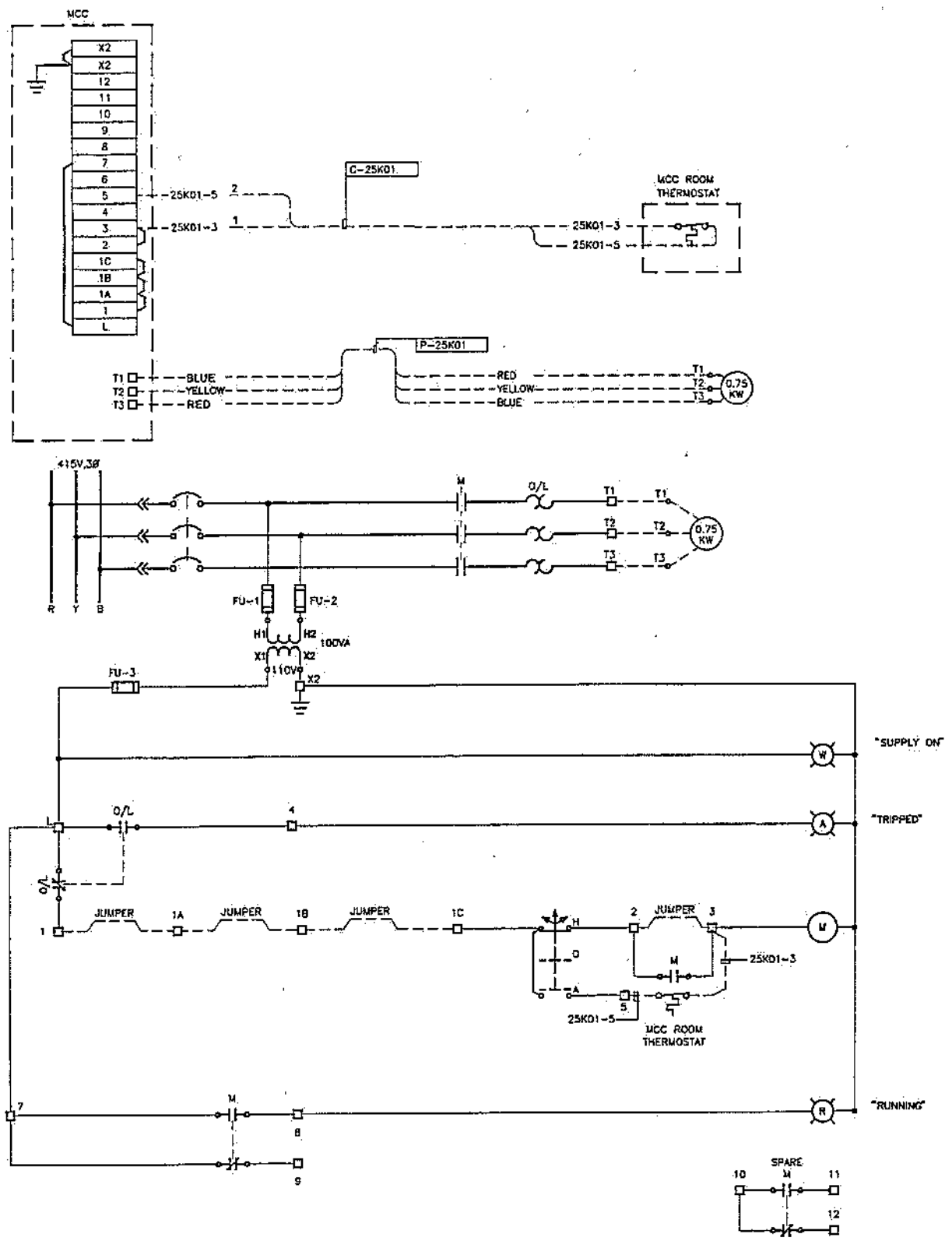

EXHAUST FAN 25-K-01

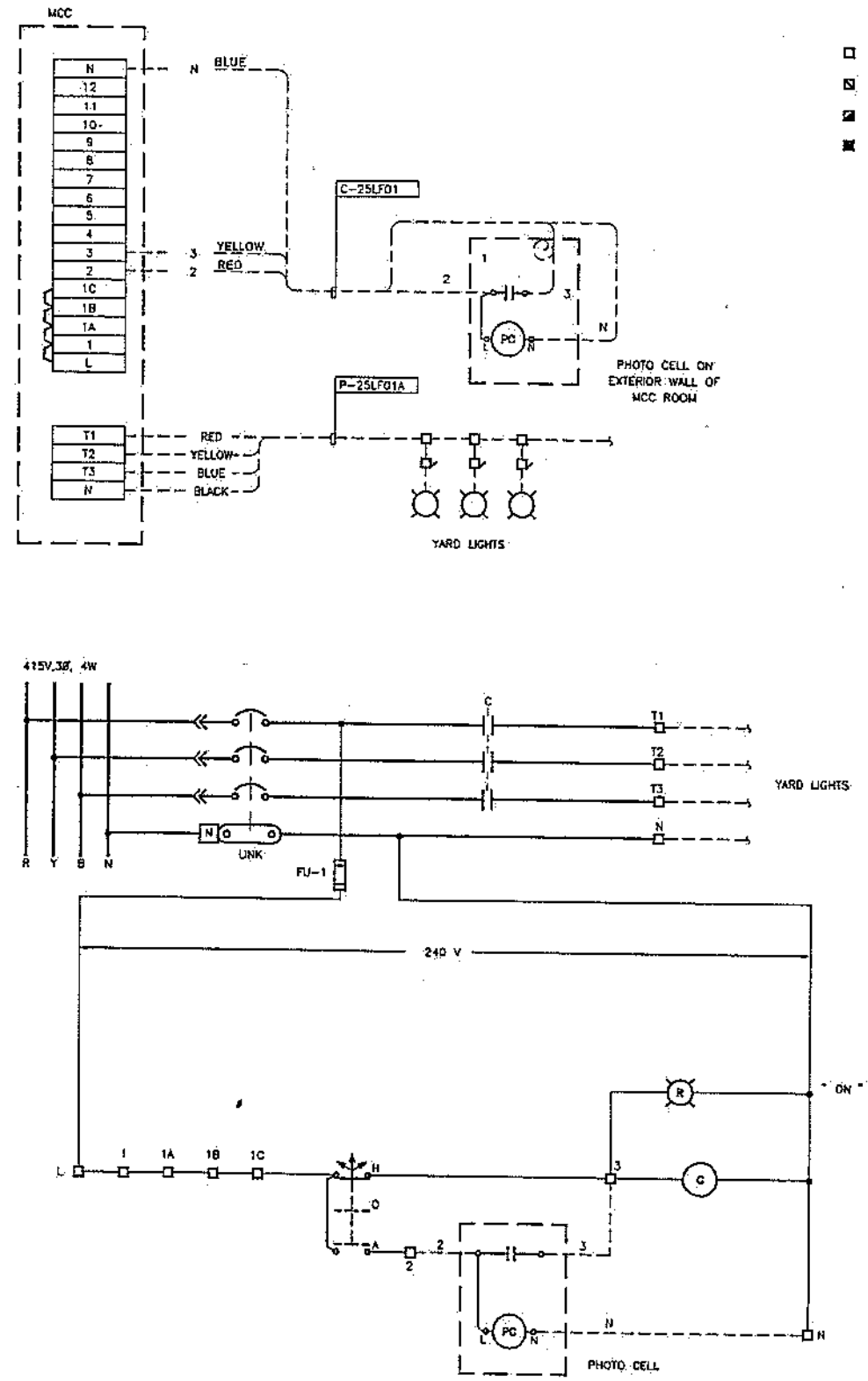

YARD LIGHTING-25-LF-01

LEGEND

- MCC TERMINALS
- FIELD JUNCTION BOX TERMINALS
- ESD PANEL TERMINALS
- PLC TERMINALS

REFERENCES		REVISIONS								
A1-25-EE-7519	AREA LIGHTING SCHEMATIC	2						FEB 06 1995	AS-BUILT, REVISED	
A1-25-EE-2202	LOW VOLTAGE SINGLE LINE DIAGRAM	1							AS-BUILT	
A1-01-EE-2102	SINGLE LINE AND SCHEMATIC SYMBOLS	0	GK	IT	HL	TOO	DC	93.02.11	ISSUED FOR CONSTRUCTION	
DRAWING No	DESCRIPTION	No	BY	CHK	LEAD	SEC	PRJ	DATE	DESCRIPTION	

APPROVALS	DATE
DESIGN P. JOHNSON	JAN 93
DRAWN G. KORTGAARD	FEB 93
CHECKED J. SEDEMOFF	FEB 93
LEAD H. LEEKW	FEB 93
SECTION HEAD P. O'DONNELL	FEB 93
PROJECT D. CORRIE	FEB 93
CLIENT	

ENGINEER STAMP

PERMIT STAMP

Propipe

Lavalin International Inc

DRAWING No

KENYA PIPELINE COMPANY LIMITED

WEST KENYA PIPELINE EXTENSION PROJECT
NAKURU TERMINAL No. 25
EXHAUST FAN 25-K-01/YARD LTG. 25-LF-01
SCHEMATIC AND WIRING DIAGRAM

JOB No 49957
ACCOUNT No 4600
SCALE NTS
REV 2

DWG. No. A1-25-EE-7511 Filename : 25EE7511

A1 841 x 594

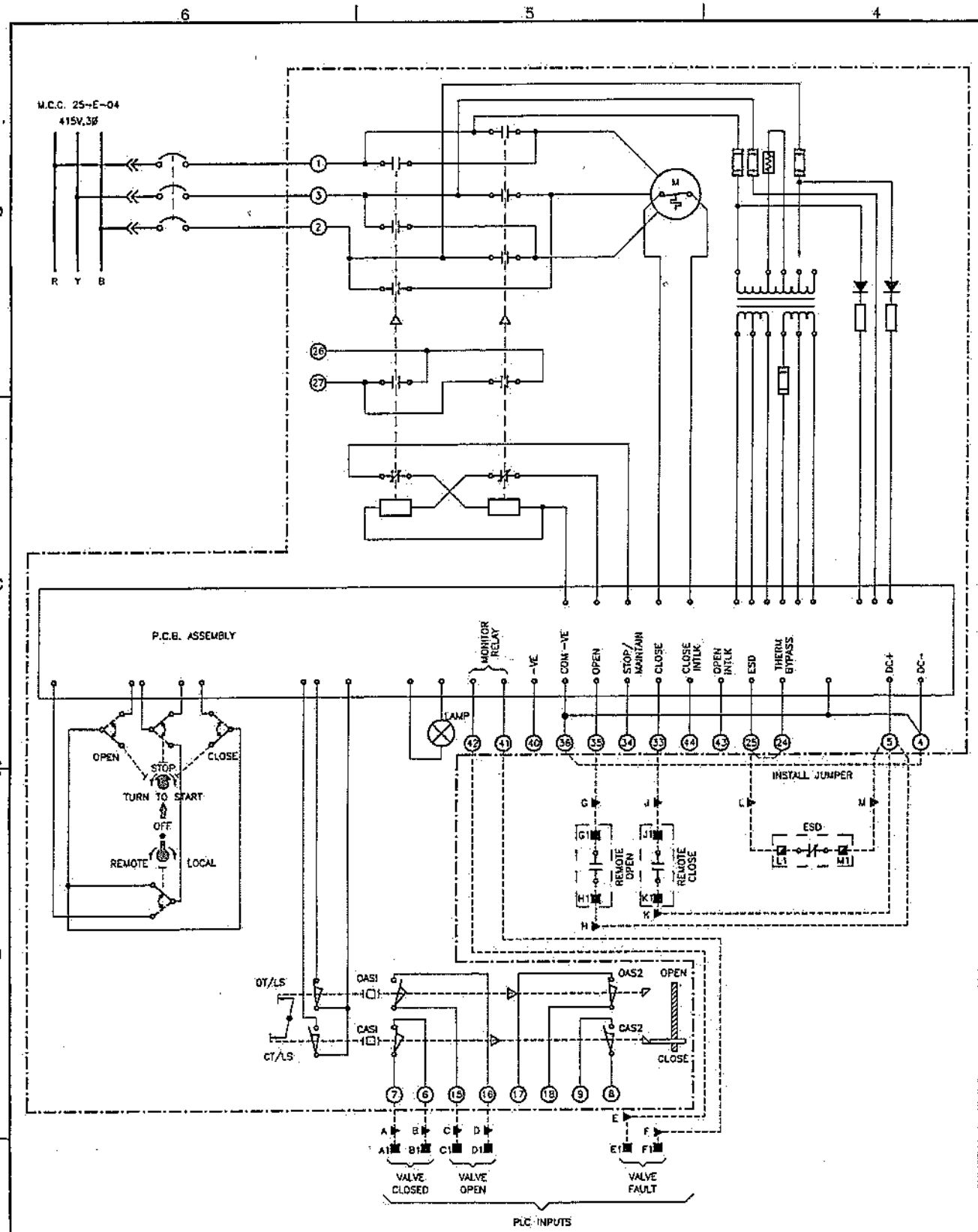

TYPICAL WIRING DIAGRAM FOR
A – SERIES MOTOR OPERATED VALVES

M.O.V. CONTROL WIRING SCHEDULE

MOV No.	CTB No.	CONTROL CABLE TAG# CTB TO MOV	FTB TERMINAL NUMBERS A	B	C	D	E	F	G	H	J	K	L	M	CONTROL PANEL TERMINAL NUMBERS A1 *	B1 *	C1 *	D1 *	E1 *	F1 *	G1 Ø	H1 Ø	J1 Ø	K1 Ø	■ L1	■ M1	CONTROL CABLE TAG# CONTROL PNL. TO CTB
25-MOV-102	3	C-25V102	1	2	3	4	5	6	7	8	9	10			1-11-31	1-11-32	1-11-33	1-11-34	1-11-35	1-11-36	8-29	8-30	8-31	8-32			C-011
25-MOV-107	1	C-25V107	1	2	3	4	5	6	7	8	9	10	11	12	1-7-41	1-7-42	1-7-43	1-7-44	1-7-45	1-7-46	6-25	6-26	6-27	6-28	59	60	C-001
25-MOV-108	1	C-25V108	13	14	15	16	17	18	19	20	21	22	23	24	1-7-53	1-7-54	1-7-55	1-7-56	1-7-57	1-7-58	6-29	6-30	6-31	6-32	61	62	C-001
25-MOV-113	1	C-25V113	25	26	27	28	29	30	31	32	33	34	35	36	1-8-9	1-8-10	1-8-11	1-8-12	1-8-13	1-8-14	7-1	7-2	7-3	7-4	63	64	C-001
25-MOV-114	1	C-25V114	37	38	39	40	41	42	43	44	45	46	47	48	1-8-21	1-8-22	1-8-23	1-8-24	1-8-25	1-8-26	7-5	7-6	7-7	7-8	65	66	C-002
25-MOV-202	3	C-25V202	13	14	15	16	17	18	19	20	21	22			1-11-19	1-11-20	1-11-21	1-11-22	1-11-23	1-11-24	8-25	8-26	8-27	8-28			C-011
25-MOV-203	1	C-25V203	49	50	51	52	53	54	55	56	57	58	59	60	1-8-41	1-8-42	1-8-43	1-8-44	1-8-45	1-8-46	7-9	7-10	7-11	7-12	67	68	C-002
25-MOV-204	1	C-25V204	73	74	75	76	77	78	79	80	81	82	83	84	1-8-53	1-8-54	1-8-55	1-8-56	1-8-57	1-8-58	7-13	7-14	7-15	7-16	69	70	C-003
25-MOV-210	1	C-25V210	85	86	87	88	89	90	91	92	93	94	95	96	1-9-9	1-9-10	1-9-11	1-9-12	1-9-13	1-9-14	7-17	7-18	7-19	7-20	71	72	C-003
25-MOV-211	1	C-25V211	97	98	99	100	101	102	103	104	105	106	107	108	1-9-21	1-9-22	1-9-23	1-9-24	1-9-25	1-9-26	7-21	7-22	7-23	7-24	73	74	C-003
25-MOV-302	3	C-25V302	25	26	27	28	29	30	31	32	33	34			2-1-17	2-1-18	2-1-19	2-1-20	2-1-21	2-1-22	9-5	9-6	9-7	9-8			C-011
25-MOV-306	2	C-25V306	1	2	3	4	5	6	7	8	9	10	11	12	1-5-41	1-5-42	1-5-43	1-5-44	1-5-45	1-5-46	7-25	7-26	7-27	7-28	75	76	C-007
25-MOV-307	2	C-25V307	13	14	15	16	17	18	19	20	21	22	23	24	1-5-53	1-5-54	1-5-55	1-5-56	1-5-57	1-5-58	7-29	7-30	7-31	7-32	77	78	C-007
25-MOV-313	2	C-25V313	25	26	27	28	29	30	31	32	33	34	35	36	1-6-9	1-6-10	1-6-11	1-6-12	1-6-13	1-6-14	8-1	8-2	8-3	8-4	79	80	C-007
25-MOV-314	2	C-25V314	73	74	75	76	77	78	79	80	81	82	83	84	1-6-21	1-6-22	1-6-23	1-6-24	1-6-25	1-6-26	8-5	8-6	8-7	8-8	81	82	C-009
25-MOV-502	3	C-25V502	53	54	55	56	57	58	59	60	61	62	63	64	2-1-29	2-1-30	2-1-31	2-1-32	2-1-33	2-1-34	9-9	9-10	9-11	9-12			C-012
25-MOV-507	2	C-25V507	85	86	87	88	89	90	91	92	93	94	95	96	1-6-41	1-6-42	1-6-43	1-6-44	1-6-45	1-6-46	8-9	8-10	8-11	8-12	83	84	C-009
25-MOV-508	2	C-25V508	97	98	99	100	101	102	103	104	105	106	107	108	1-6-53	1-6-54	1-6-55	1-6-56	1-6-57	1-6-58	8-13	8-14	8-15	8-16	85	86	C-009
25-MOV-514	2	C-25V514	145	146	147	148	149	150	151	152	153	154	155	156	1-7-9	1-7-10	1-7-11	1-7-12	1-7-13	1-7-14	8-17	8-18	8-19	8-20	87	88	C-010
25-MOV-515	2	C-25V515	157	158	159	160	161	162	163	164	165	166	167	168	1-7-21	1-7-22	1-7-23	1-7-24	1-7-25	1-7-26	8-21	8-22	8-23	8-24	89	90	C-010
25-MOV-602	3	C-25V602	65	66	67	68	69	70	71	72	73	74			1-11-43	1-11-44	1-11-45	1-11-46	1-11-47	1-11-48	9-1	9-2	9-3	9-4			C-012
25-MOV-611	1	C-25V611	109	110	111	112	113	114	115	116	117	118	119	120	1-4-9	1-4-10	1-4-11	1-4-12	1-4-13	1-4-14	6-1	6-2	6-3	6-4	91	92	C-004
25-MOV-613	1	C-25V613	121	122	123	124	125	126	127	128	129	130	131	132	1-4-21	1-4-22	1-4-23	1-4-24	1-4-25	1-4-26	6-5	6-6	6-7	6-8	93	94	C-004
25-MOV-622	1	C-25V622	145	146	147	148	149	150	151	152	153	154	155	156	1-4-41	1-4-42	1-4-43	1-4-44	1-4-45	1-4-46	6-9	6-10	6-11	6-12	95	96	C-005
25-MOV-624	1	C-25V624	157	158	159	160	161	162	163	164	165	166	167	168	1-4-53	1-4-54	1-4-55	1-4-56	1-4-57	1-4-58	6-13	6-14	6-15	6-16	97	98	C-005
25-MOV-631	1	C-25V631	169	170	171	172	173	174	175	176	177	178	179	180	1-5-9	1-5-10	1-5-11	1-5-12	1-5-13	1-5-14	6-17	6-18	6-19	6-20	99	100	C-005
25-MOV-633	1	C-25V633	181	182	183	184	185	186	187	188	189	190	191	192	1-5-21	1-5-22	1-5-23	1-5-24	1-5-25	1-5-26	6-21	6-22	6-23	6-24	101	102	C-006
25-MOV-820															1-10-57	1-10-58	1-10-59	1-10-60	1-10-61	1-10-62	9-21	9-22	9-23	9-24			C-25V820
25-MOV-821															1-11-5	1-11-6	1-11-7	1-11-8	1-11-9	1-11-10	9-25	9-26	9-27	9-28			C-25V821
25-MOV-822															1-10-37	1-10-38	1-10-39	1-10-40	1-10-41	1-10-42	9-17	9-18	9-19	9-20			C-25V822
25-MOV-845	3	C-25V845	75	76	77	78	79	80	81	82	83	84			1-11-55	1-11-56	1-11-57	1-11-58	1-11-59	1-11-60	9-13	9-14	9-15	9-16			C-012
25-MOV-846	3	C-25V846	85	86	87	88	11	12	23	24	35	36			2-1-5	2-1-6	2-1-7	2-1-8	2-1-9	2-1-10	9-29	9-30	9-31	9-32			C-011, 012

TORQUE AND LIMIT SWITCH OPERATION

	OPEN	INTERMEDIATE	SHUT
OT/LS			
CT/LS			
CAS1			
CAS2			
OAS1			
OAS2			

SWITCH MADE

LEGEND

- ⊗ – MOV TERMINALS
- ■ – ESD TERMINALS
- ▶ – CTB FIELD CONTROL TERMINAL BOX TERMINALS
- ■ – CONTROL PANEL TERMINALS
- * – FIRST 2 DIGITS OF TERMINAL STRIP ARE 827–1
- Ø – FIRST 3 DIGITS OF TERMINAL STRIP ARE 836–1–2

DRAWING No	DESCRIPTION

REFERENCES

No	BY	CHK	LEAD	SEC	PRJ	DATE	DESCRIPTION
1						FEB 06 1995	AS-BUILT
0	GK	IT	HL	FCO	DC	93.02.11	ISSUED FOR CONSTRUCTION

REVISIONS

APPROVALS		DATE
DESIGN	H. JOHNSON	JAN 93
DRAWN	D. NORDGAARD	FEB 93
CHECKED	I. TEDEROFF	FEB 93
LEAD	H. LEDOW	FEB 93
SECTION HEAD	F. O'DONNELL	FEB 93
PROJECT	D. DENNYE	FEB 93
CLIENT		

ENGINEER STAMP

PERMIT STAMP

Propipe

Lavalin International Inc

DRAWING No

KENYA PIPELINE COMPANY LIMITED

WEST KENYA PIPELINE EXTENSION PROJECT
NAKURU TERMINAL No. 25
415V 3PH MOV SCHEMATIC
WIRING DIAGRAM/CONTROL WIRING SCHEDULE

JOB No 49957
ACCOUNT No 4600
SCALE NTS
REV 1

DWG. No. A1-25-EE-7515 Filename : 25EE7515

A1 841 x 594

January 1991 REVISIONS

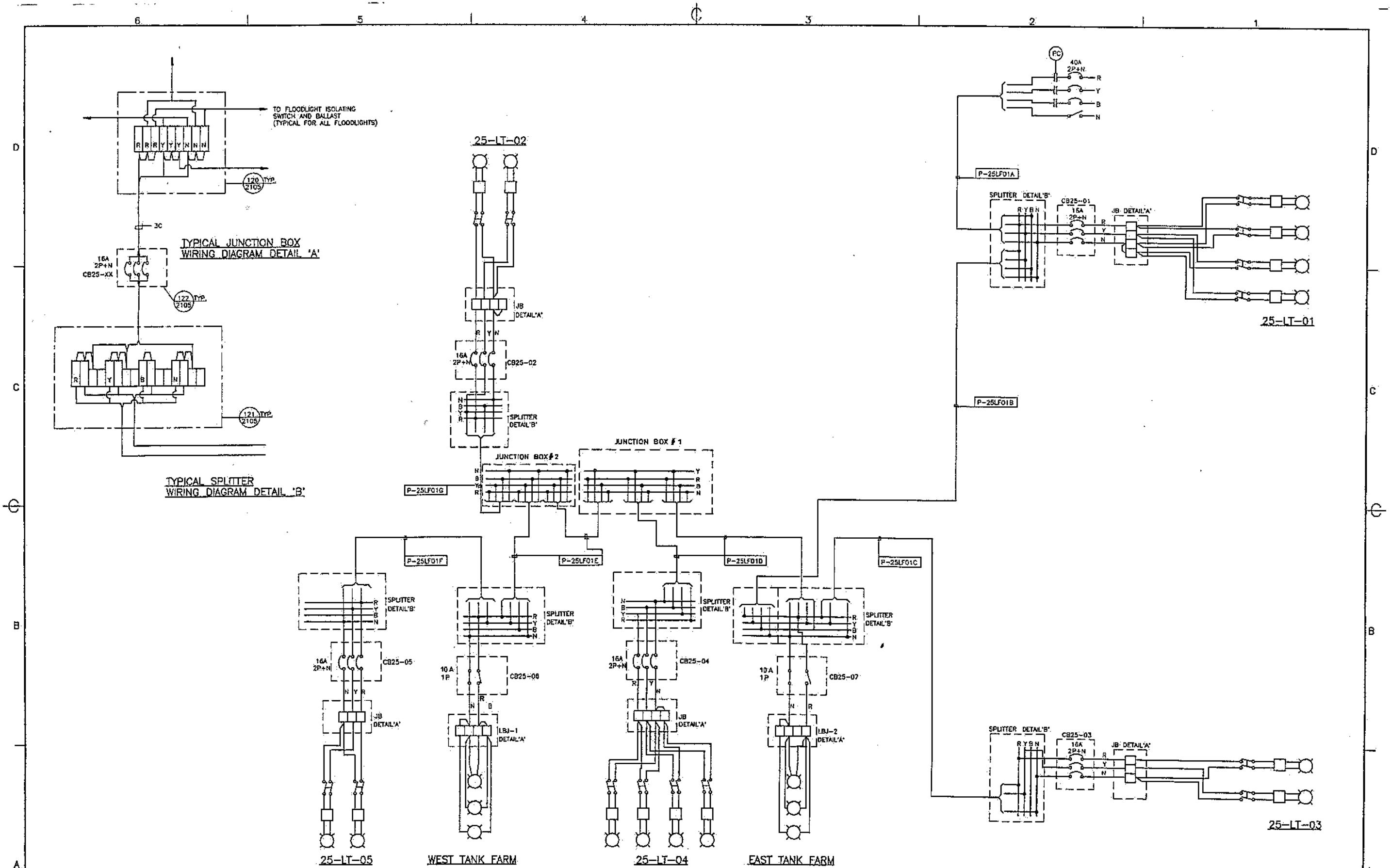

DRAWING No	DESCRIPTION

REFERENCES

No	BY	CHK	LEAD	SEC	PRJ	DATE	DESCRIPTION
3						FEB 0 5 1999	AS-BUILT, REVISED
2							AS-BUILT
1	GK	IT	HL	FOD	DC	93.02.11	ISSUED FOR CONSTRUCTION
0	LF	IT	HL	FOD	SMP	92.11.23	ISSUED FOR APPROVAL

REVISIONS

APPROVALS	DATE
DESIGN C.FACCA	NOV.92
DRAWN L.F.	NOV.92
CHECKED T.TEDEROFF	NOV.92
LEAD H.HESKIN	NOV.92
SECTION HEAD T.O'DONNELL	NOV.92
PROJECT S.PANT	92.11.23
CLIENT	

ENGINEER STAMP

PERMIT STAMP

Propipe

Lavalin International Inc

DRAWING No

KENYA PIPELINE COMPANY LIMITED

WEST KENYA PIPELINE EXTENSION PROJECT
NAKURU TERMINAL No. 25
AREA LIGHTING SCHEMATIC

JOB No 49957
ACCOUNT No 4600
SCALE N.T.S
REV 3

A1-25-EE-7519 Filename : 25EE7519

Amendy 1991 KENYA43

A1 841 x 594

LEGEND

- CONTACTOR
- FIRE WATER PUMP
- FIRE WATER PUMP CONTROLLER

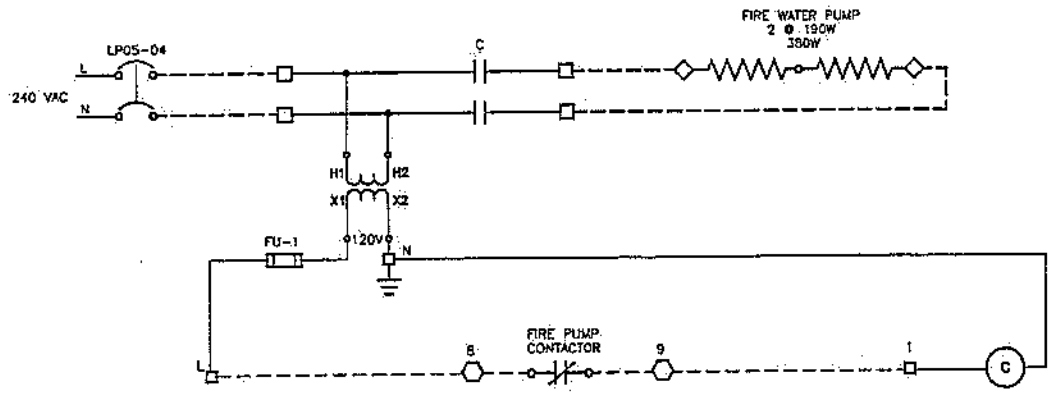

FIRE PUMP MOTOR SPACE HEATER

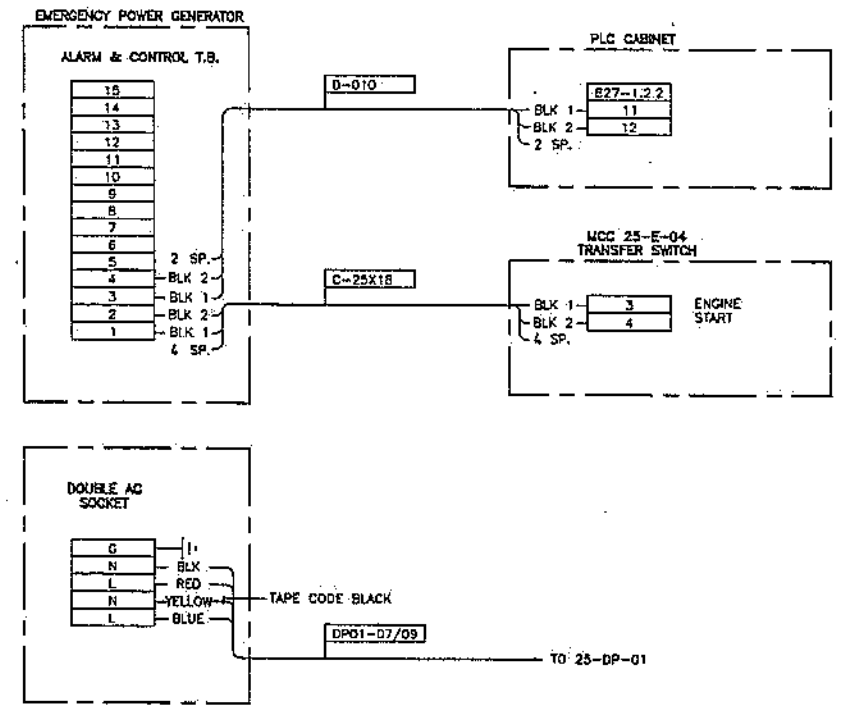

EMERGENCY POWER GENERATOR 25-X-18

REFERENCES		REVISIONS								
		2								AS-BUILT, REVISED
		1								AS-BUILT
DRAWING No	DESCRIPTION	0	VN	JT	HL	FOO	DJ	93.05.20		ISSUED FOR CONSTRUCTION
		No	BY	CHK	LEAD	SEC	PRJ	DATE		DESCRIPTION

APPROVALS	DATE
DESIGN V. QUANG	MAY. 93
DRAWN V. NGUYEN	MAY 93
CHECKED J. TERCROT	MAY 93
LEAD H. LEBRUN	MAY 93
SECTION HEAD F. O'CONNELL	MAY 93
PROJECT D. JONES	93.05.20
CLIENT	

ENGINEER STAMP

PERMIT STAMP

Propipe

Lavalin International Inc

DRAWING No

KENYA PIPELINE COMPANY LIMITED

WEST KENYA PIPELINE EXTENSION PROJECT
NAKURU PUMP STATION & TERMINAL No. 25
MISCELLANEOUS SCHEMATICS
AND WIRING DIAGRAM

JOB No 49957
ACCOUNT No 4600
SCALE NTS
REV 2

DWG. No. A1-25-EE-7521 Filename : 25EE7521

A1 841 x 594

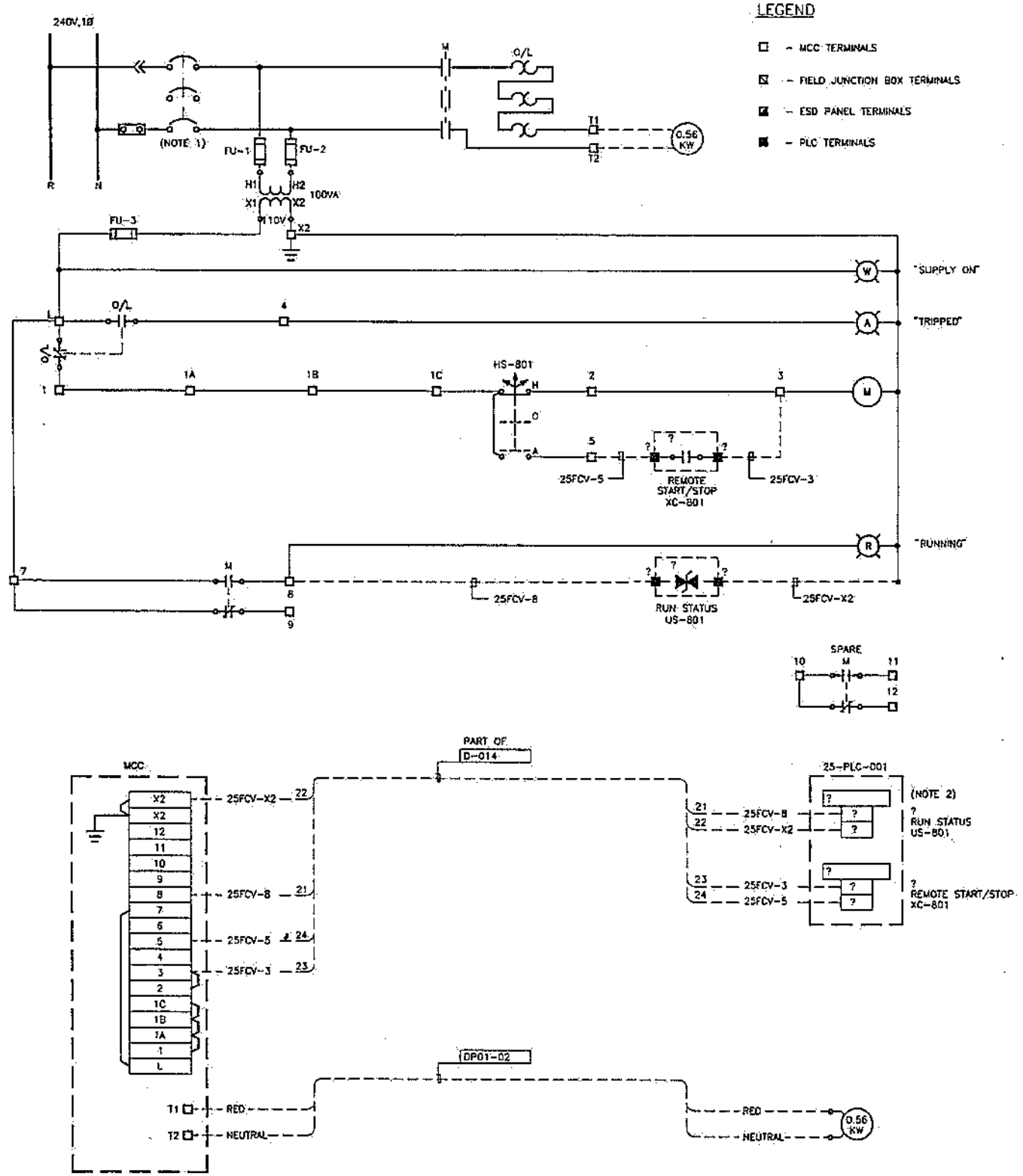

NOTES:

1. SIEMENS PROVIDED 3 PHASE STARTER TO BE USED AS SINGLE PHASE STARTER. FIELD TO CONNECT "NEUTRAL STUD" TO MCC NEUTRAL BUS.
2. FIELD INSTRUMENTATION TO ASSIGN ALL NUMBERS MARKED-UP WITH "?".

REFERENCES		REVISIONS									
DRAWING No	DESCRIPTION	No	BY	CHK	LEAD	SEC	PRJ	DATE	DESCRIPTION	APPROVALS	DATE
		1							ISSUED FOR CONSTRUCTION		

DESIGN R.L. OJO JUN 94
DRAWN R.L. OJO JUN 94
CHECKED
LEAD S. NASCANIN JUN 94
SECTION HEAD
PROJECT
CLIENT

ENGINEER STAMP

PERMIT STAMP

Propipe

Lavalin International Inc

DRAWING No

KENYA PIPELINE COMPANY LIMITED

WEST KENYA PIPELINE EXTENSION PROJECT
NAKURU TERMINAL No. 25
E/H CONTROL VALVE 25-FCV-801
MOTOR SCHEMATIC AND WIRING DIAGRAM

JOB No 49957
ACCOUNT No 4600
SCALE NTS
REV 1

DWG. No. A1-25-EE-7522 Filename : 25EE7522

A1 841 x 594

January 1991 KENYA1

FIELD TERMINAL BOX CTB-1

* - DIRECT ROUTING TO ESD PANEL

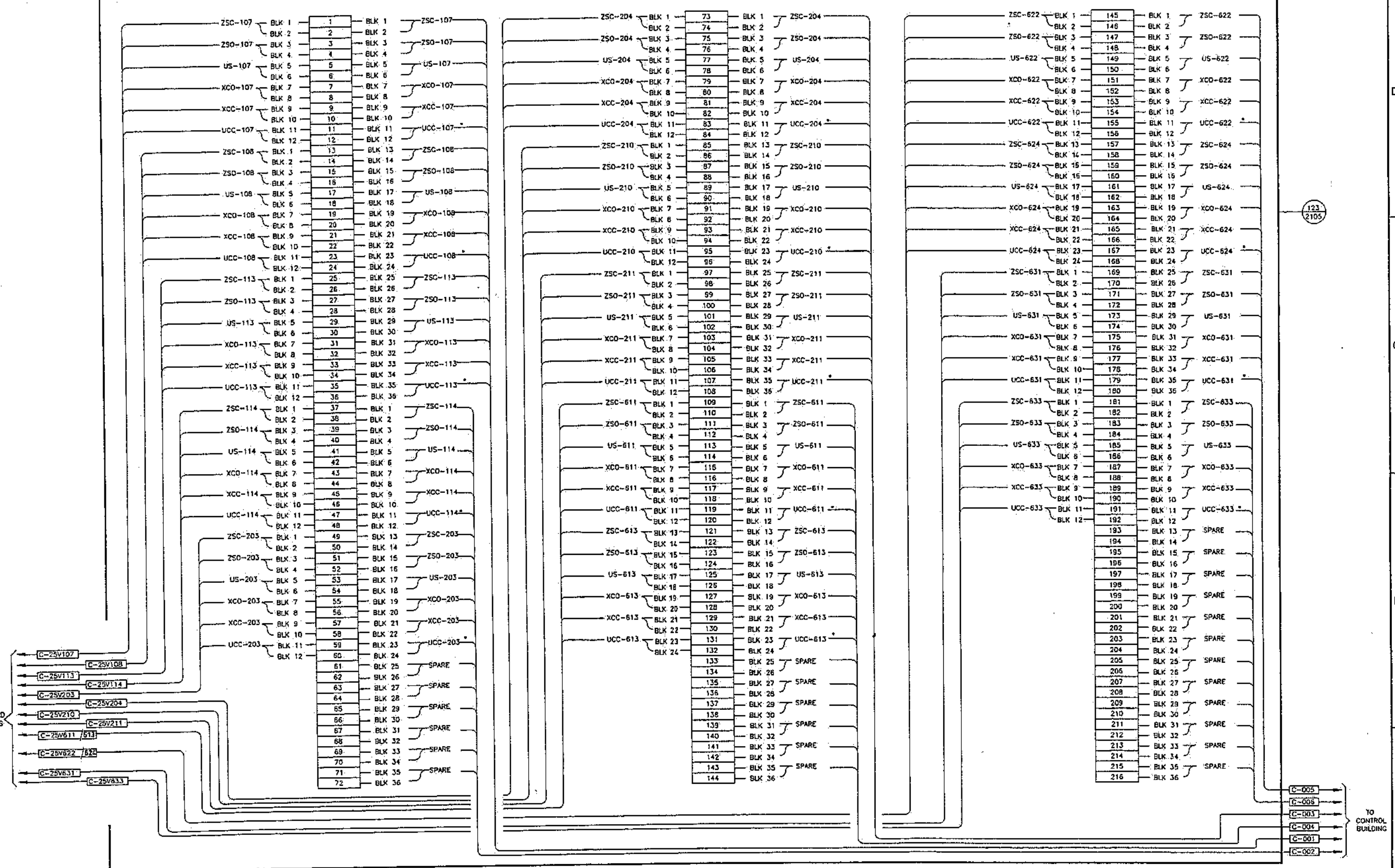

REFERENCES		REVISIONS								
		No	BY	CHK	LEAD	SEC	PRJ	DATE	DESCRIPTION	
		4							AS-BUILT, REVISED	
		3							AS-BUILT	
A1-25-EE-7515	415V 3 PH MOV WIRING DIAGRAM	2	LF	IT	HL	FOO	DC	93.02.11	ISSUED FOR CONSTRUCTION	
A1-25-EE-6302	POWER & CONTROL CABLE SCHEDULE	1	LF	CF	HL	FOO	SMP	92.11.23	ISSUED FOR APPROVAL	
A1-25-EE-6101	TANK FARM	0	JJ	AU	HL	FOO	WK	FEB.92	ISSUED FOR INFORMATION	
DRAWING No	DESCRIPTION									

APPROVALS		DATE
DESIGN	A. UNDER	FEB.92
DRAWN	J.J./G.V.D.	FEB.92
CHECKED	A. UNDER	FEB.92
LEAD	H. LESKIW	FEB.92
SECTION HEAD	F. O'DONNELL	FEB.92
PROJECT	W. KESEL	FEB.92
CLIENT		

ENGINEER STAMP

PERMIT STAMP

Propipe

Lavalin International Inc

DRAWING No

KENYA PIPELINE COMPANY LIMITED

WEST KENYA PIPELINE EXTENSION PROJECT
NAKURU TERMINAL/PUMP STATION No 25
TERMINAL BOX CTB-1
WIRING DIAGRAM

JOB No 49957
ACCOUNT No 4600
SCALE NTS
REV. 4

DWG. No. A1-25-EE-7601 Filename : 25EE7601

A1 841 x 594

JANUARY 1991 KENYA41

69

FIELD TERMINAL BOX CTB-2

* - DIRECT ROUTING TO ESD PANEL

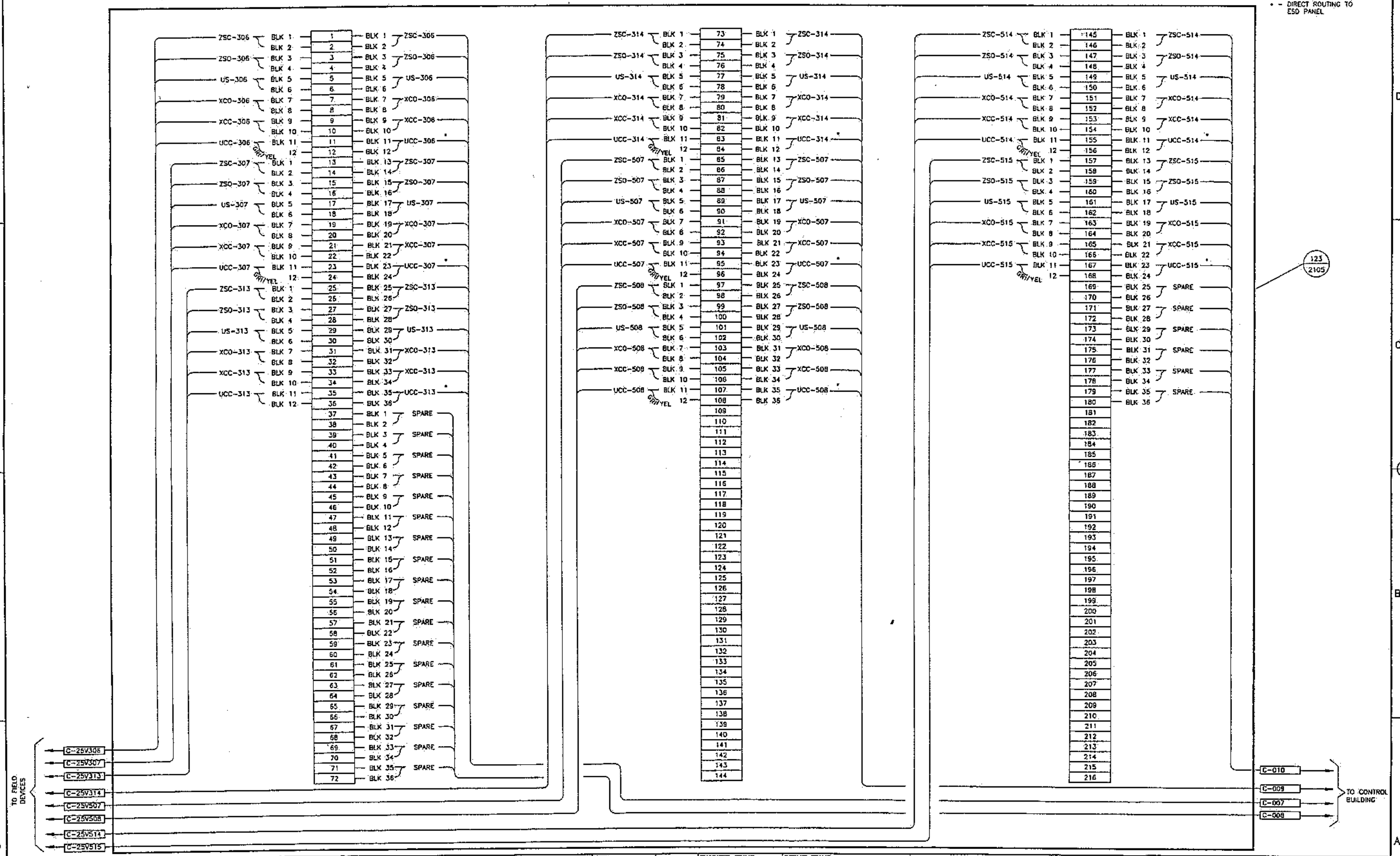

REFERENCES		REVISIONS								
		4						HOC	FEB 1 6 1994	AS - BUILT, REVISED
		3								AS-BUILT
A1-25-EE-7515	415V 4PH. MOV SCHEMATIC/WIRING DIAGRAM	2	LF	rf	HL	FOD	OC		93.02.11	ISSUED FOR CONSTRUCTION
A1-25-EE-6302	POWER AND CONTROL CABLE SCHEDULE	1	LF	CF	HL	FOD	SMP		92.11.23	ISSUED FOR APPROVAL
A1-25-EE-5101	TANK FARM	0	JJ	AU	HL	FOD	WK		FEB.92	ISSUED FOR INFORMATION
DRAWING No	DESCRIPTION	No	BY	CHK	LEAD	SEC	PRJ		DATE	DESCRIPTION

APPROVALS		DATE
DESIGN	A. UNGER	FEB.92
DRAWN	J.J./G.V.D.	FEB.92
CHECKED	A. UNGER	FEB.92
LEAD	H. LESKIW	FEB.92
SECTION HEAD	F. O'CONNELL	FEB.92
PROJECT	W. HESEL	FEB.92
CLIENT		

ENGINEER STAMP

PERMIT STAMP

Propipe

Lavalin International Inc

DRAWING No

KENYA PIPELINE COMPANY LIMITED

WEST KENYA PIPELINE EXTENSION PROJECT
NAKURU TERMINAL/PUMP STATION No 25
TERMINAL BOX CTB-2
WIRING DIAGRAM

JOB No 49957
ACCOUNT No 4600
SCALE NTS
REV 4

DWG. No. A1-25-EE-7602 Filename : 25EE7602

January 1991 KENYA1

A1 841 x 594

60

70

FIELD TERMINAL BOX CTB-3

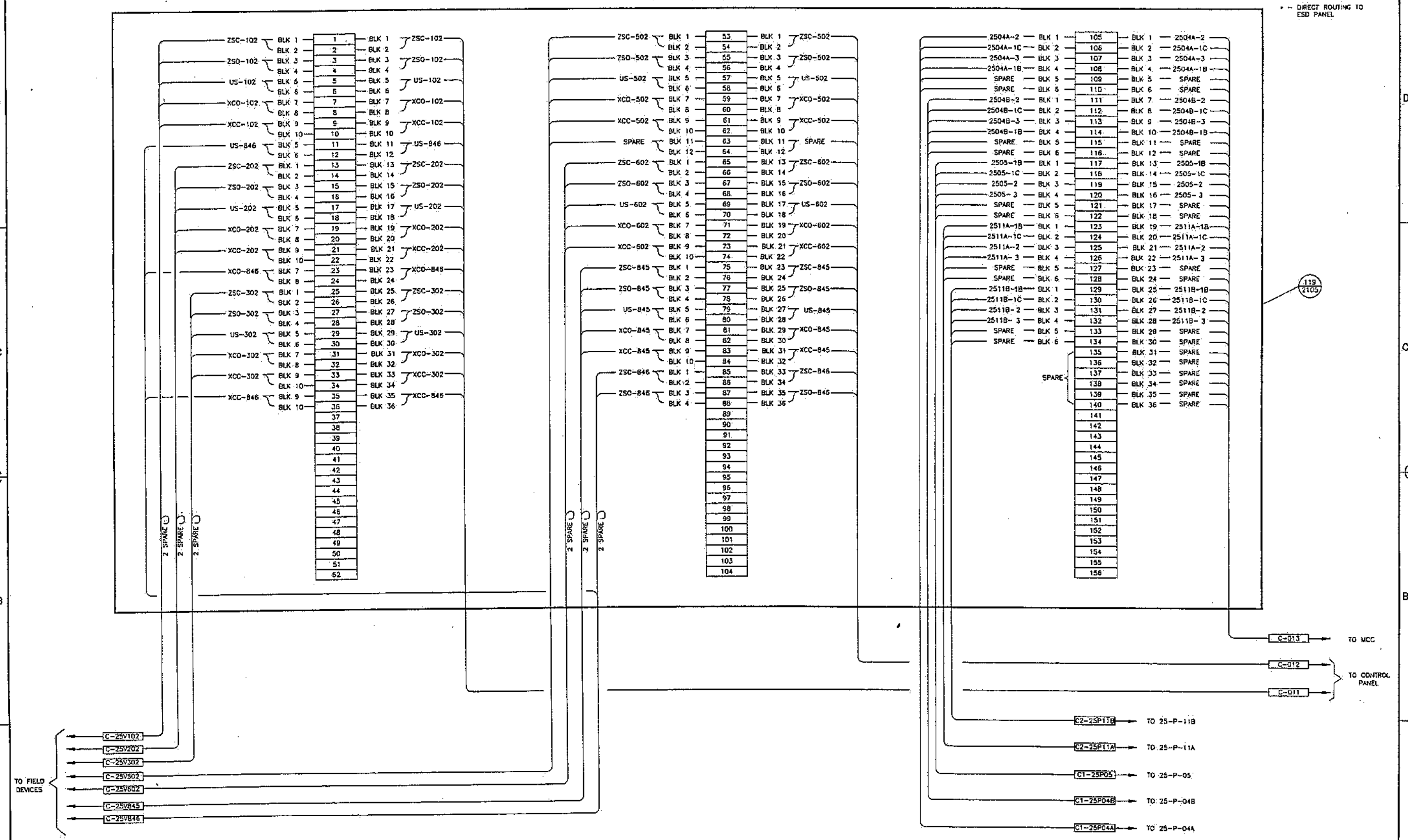

DRAWING No	DESCRIPTION
A1-25-EE-6302	POWER & CONTROL CABLE SCHEDULE
A1-25-EE-6106	LOADING PUMP AND MANIFOLD

No	BY	CHK	LEAD	SEC	PRJ	DATE	DESCRIPTION
4						FEB 06 1993	AS-BUILT, REVISED
3							AS-BUILT
2	LF	IT	HL	FOD	DC	93.02.11	ISSUED FOR CONSTRUCTION
1	LF	CF	HL	FOD	SMP	92.11.23	ISSUED FOR APPROVAL
0	JJ	JJ	HL	FOD	WK	FEB.92	ISSUED FOR INFORMATION

APPROVALS		DATE
DESIGN	A. LINGER	FEB 92
DRAWN	JJ/D-D	FEB 92
CHECKED	A. LINGER	FEB 92
LEAD	H. LESKIW	FEB 92
SECTION HEAD	F. O'DONNELL	FEB 92
PROJECT	W. KESEL	FEB 92
CLIENT		

ENGINEER STAMP

PERMIT STAMP

Propipe

Lavalin International Inc

DRAWING No

KENYA PIPELINE COMPANY LIMITED

WEST KENYA PIPELINE EXTENSION PROJECT
NAKURU TERMINAL/PUMP STATION No 25
TERMINAL BOX CTB-3
WIRING DIAGRAM

JOB No 49957
ACCOUNT No 4600
SCALE NTS
REV 4

DWG. No. A1-25-EE-7603 Filename : 25EE7603

A1 841 x 594

FIELD TERMINAL BOX NO. DTB-1

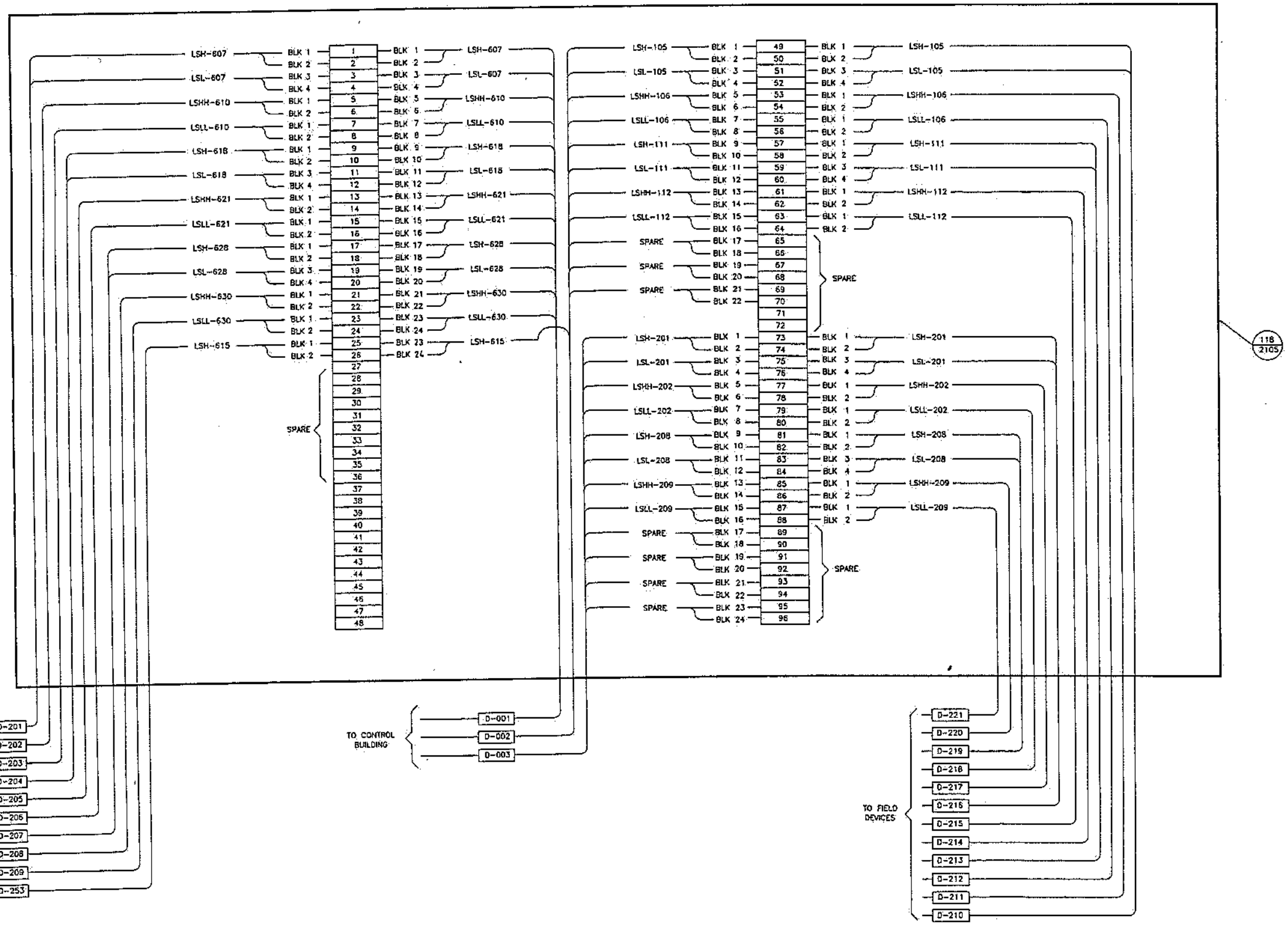

LEGEND

BLK - BLACK

REFERENCES	
A1-25-EE-7302	INSTRUMENTATION CABLE SCHEDULE (DISCRETE)
A1-25-EE-7301	INSTRUMENTATION CABLE SCHEDULE (DISCRETE)
DRAWING No	DESCRIPTION

REVISIONS								
3								AS-BUILT, REVISED
2								AS-BUILT
1	LF	LT	HL	FOD	DC	93.02.11		ISSUED FOR CONSTRUCTION
0	LF	CT	HL	FOD	SMP	92.11.23		ISSUED FOR APPROVAL
No	BY	CHK	LEAD	SEC	PRJ	DATE		DESCRIPTION

APPROVALS	DATE
DESIGN D.FAQDA	NOV.92
DRAWN LF	NOV.92
CHECKED J. TEDEHOFF	NOV.92
LEAD H. LESHW	NOV.92
SECTION HEAD F. O'DONNELL	NOV.92
PROJECT S. PANT	93.11.23
CLIENT	

ENGINEER STAMP

PERMIT STAMP

Propipe

Lavalin International Inc

DRAWING No

KENYA PIPELINE COMPANY LIMITED

WEST KENYA PIPELINE EXTENSION PROJECT
NAKURU TERMINAL No. 25
TERMINAL BOX DTB-1
WIRING DIAGRAM

JOB No 49957
ACCOUNT No 4600
SCALE NTS
REV 3

DWG. No. A1-25-EE-7606 Filename : 25EE7606

A1 841 x 594

January 1991 KENYA1

(62)

FIELD TERMINAL BOX NO. DTB-2

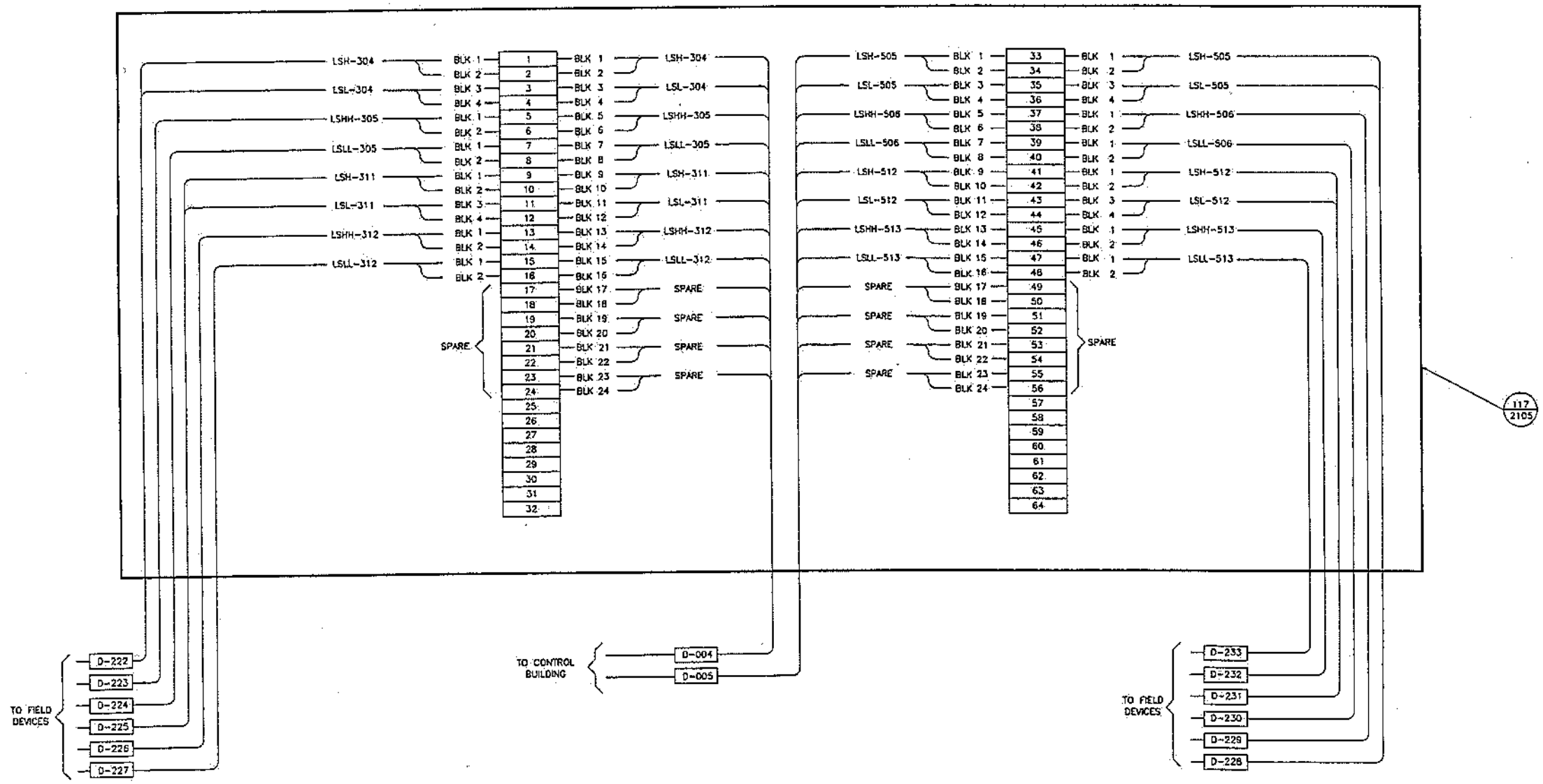

LEGEND

BLK - BLACK

REFERENCES	
A1-25-EE-7302	INSTRUMENTATION CABLE SCHEDULE (DISCRETE)
A1-25-EE-7301	INSTRUMENTATION CABLE SCHEDULE (DISCRETE)
DRAWING No	DESCRIPTION

REVISIONS							
						FEB 06 1996	
2						FEB 06 1996	AS-BUILT
1	LF	IT	HL	FDO	DC	93.02.11	ISSUED FOR CONSTRUCTION
0	LF	CF	HL	FDO	SMP	92.11.23	ISSUED FOR APPROVAL
No	BY	CHK	LEAD	SEC	PRJ	DATE	DESCRIPTION

APPROVALS	DATE
DESIGN C. FAZICA	NOV 92
DRAWN LF	NOV 92
CHECKED I. TEDERSET	NOV 92
LEAD H. LESKIW	NOV 92
SECTION HEAD T. O'DONNELL	NOV 92
PROJECT S. PANT	92 11 23
CLIENT	

ENGINEER STAMP

PERMIT STAMP

Propipe

Lavalin International Inc

DRAWING No

KENYA PIPELINE COMPANY LIMITED

WEST KENYA PIPELINE EXTENSION PROJECT
NAKURU TERMINAL No. 25
TERMINAL BOX DTB-2
WIRING DIAGRAM

JOB No 49957
ACCOUNT No 4600
SCALE NTS
REV 2

DWG. No. A1-25-EE-7607 Filename : 25EE7607

A1 841 x 594

January 1991 KENYA41

(63)

FIELD TERMINAL BOX NO. DTB-3

118
2105

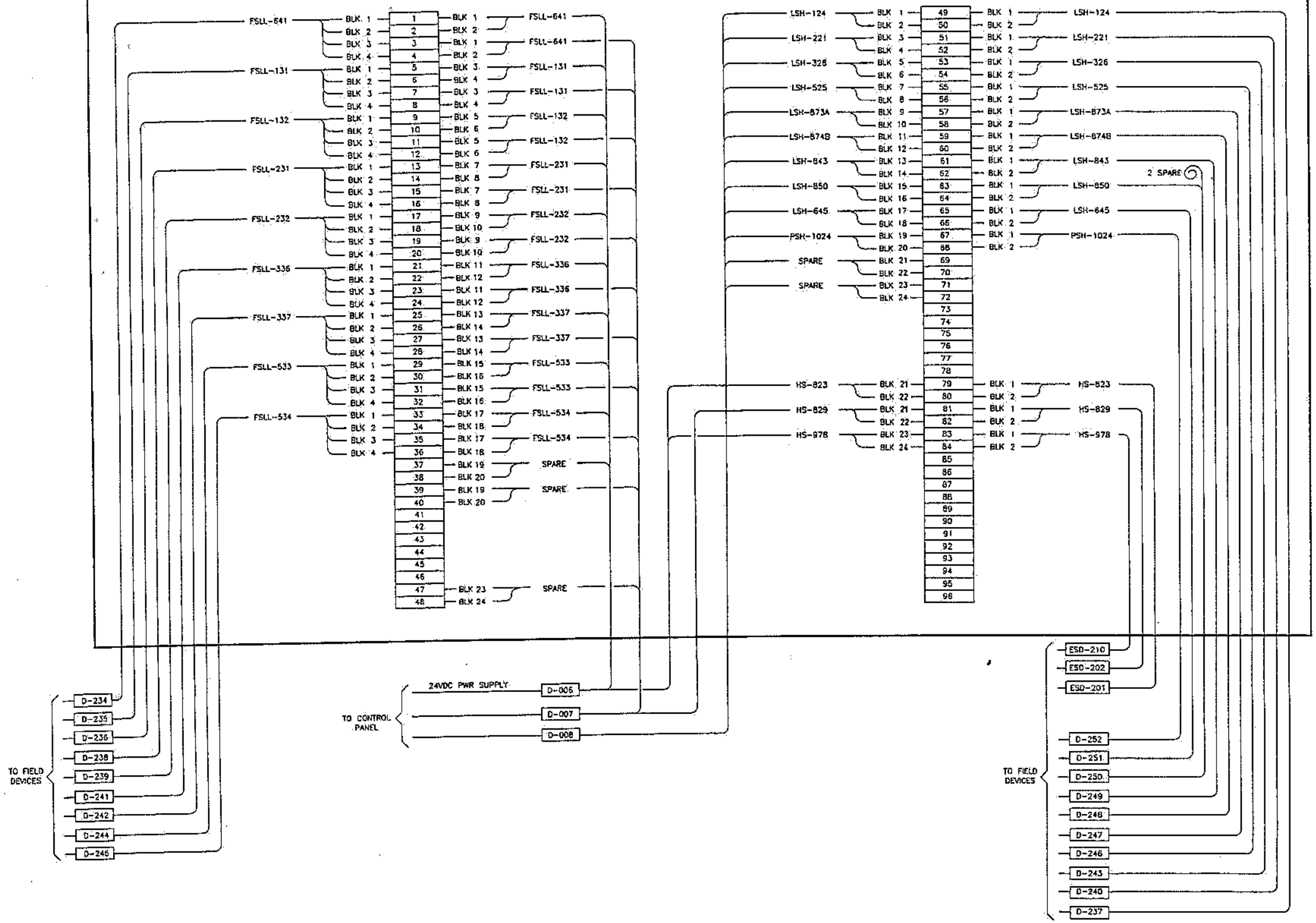

LEGEND

BLK - BLACK

REFERENCES	
A1-25-EE-7302	INSTRUMENTATION CABLE SCHEDULE (DISCRETE)
A1-25-EE-7301	INSTRUMENTATION CABLE SCHEDULE (DISCRETE)
DRAWING No	DESCRIPTION

REVISIONS								
3							FEB 05 1996	AS-BUILT, REVISED
2								AS-BUILT
1	LF	TT	HL	FDD	DC		93.02.11	ISSUED FOR CONSTRUCTION
0	VN	TT	HL	FDD	SP		92.11.23	ISSUED FOR APPROVAL
No	BY	CHK	LEAD	SEC	PRJ		DATE	DESCRIPTION

APPROVALS	DATE
DESIGN C. FAGGA	NOV.92
DRAWN M. MOUNTN	NOV.92
CHECKED I. SIDERHOFF	NOV.92
LEAD M. LESKIW	NOV.92
SECTION HEAD P. O'DONNELL	NOV.92
PROJECT S. PANT	92.11.23
CLIENT	

ENGINEER STAMP

PERMIT STAMP

Propipe

Lavalin International Inc

DRAWING No

KENYA PIPELINE COMPANY LIMITED

WEST KENYA PIPELINE EXTENSION PROJECT
NAKARU TERMINAL No. 25
TERMINAL BOX DTB-3
WIRING DIAGRAM

JOB No 49957
ACCOUNT No 4600
SCALE NTS
REV 3

DWG. No. A1-25-EE-7608 Filename : 25EE7608

A1 841 x 594

Jancity 1991 KENYA1

(64)

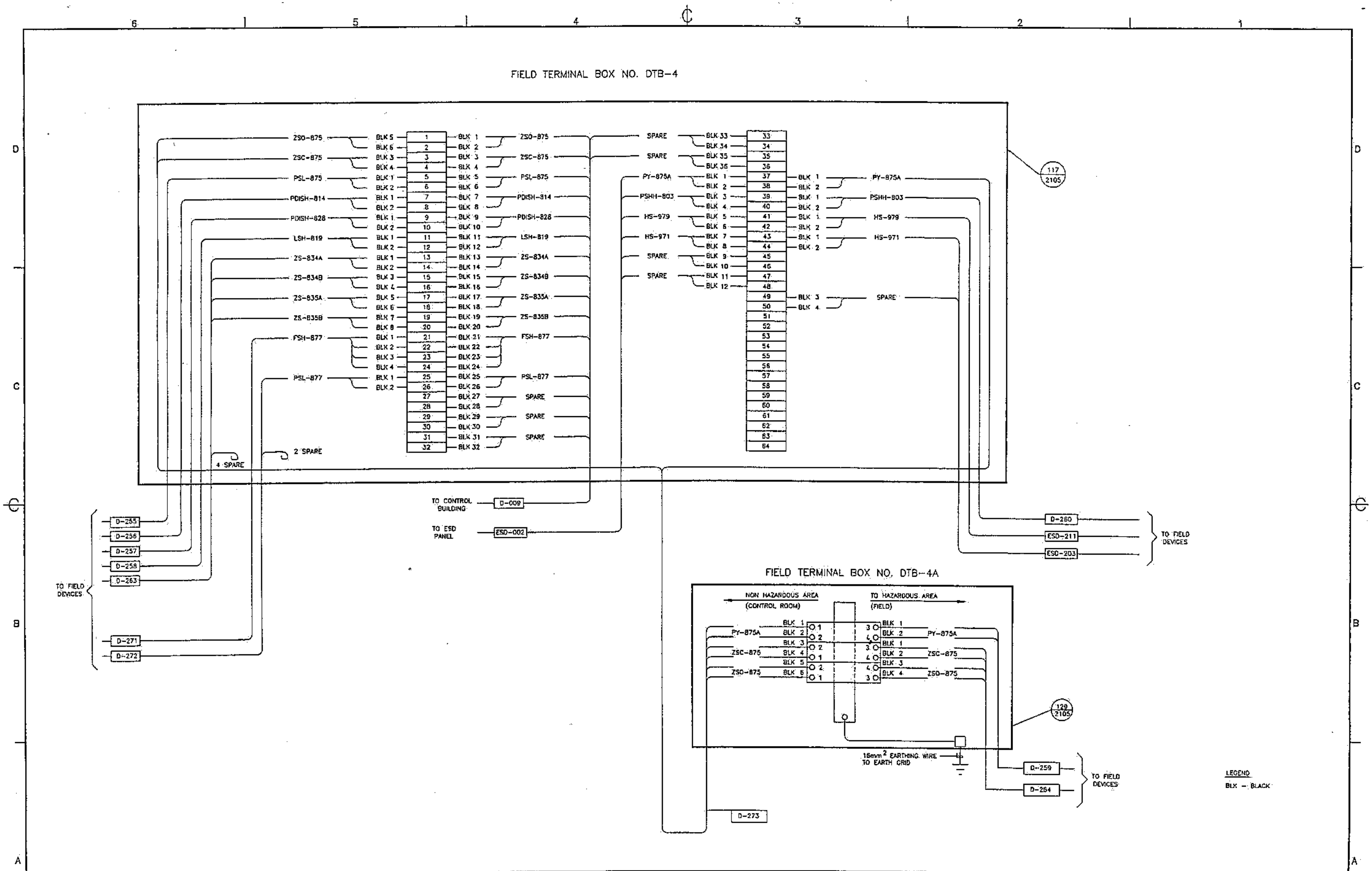

REFERENCES		REVISIONS							
		4						FEB 05 1996	AS-BUILT, REVISED
		3							AS-BUILT
		2	VH	IT	HL	FOO	DJ	93.05.07	REVISED - ISSUED FOR CONSTRUCTION
A1-25-EE-7302	INSTRUMENTATION CABLE SCHEDULE (DISCRETE)	1	LF	IT	HL	FOO	DC	93.02.11	ISSUED FOR CONSTRUCTION
A1-25-EE-7301	INSTRUMENTATION CABLE SCHEDULE (DISCRETE)	0	VH	CF	HL	FOO	SP	92.11.23	ISSUED FOR APPROVAL
DRAWING No	DESCRIPTION	No	BY	CHK	LEAD	SEC	PRJ	DATE	DESCRIPTION

APPROVALS		DATE
DESIGN	C. FADCA	NOV.92
DRAWN	V. HOUYER	NOV.92
CHECKED	I. TEODOROF	NOV.92
LEAD	H. LEGGIN	NOV.92
SECTION HEAD	F. O'DONNELL	NOV.92
PROJECT	Y. PANT	92.11.23
CLIENT		

ENGINEER STAMP

PERMIT STAMP

Propipe

Lavalin International Inc

DRAWING No

KENYA PIPELINE COMPANY LIMITED

WEST KENYA PIPELINE EXTENSION PROJECT
NAKURU TERMINAL No. 25
TERMINAL BOX DTB-4
WIRING DIAGRAM

JOB No 49957
ACCOUNT No 4600
SCALE NTS
REV 4

DWG. No. A1-25-EE-7609 Filename : 25EE7609

January 1991 KENYAN

A1 841 x 594

(65)

FIELD TERMINAL BOX NO. DTB-5

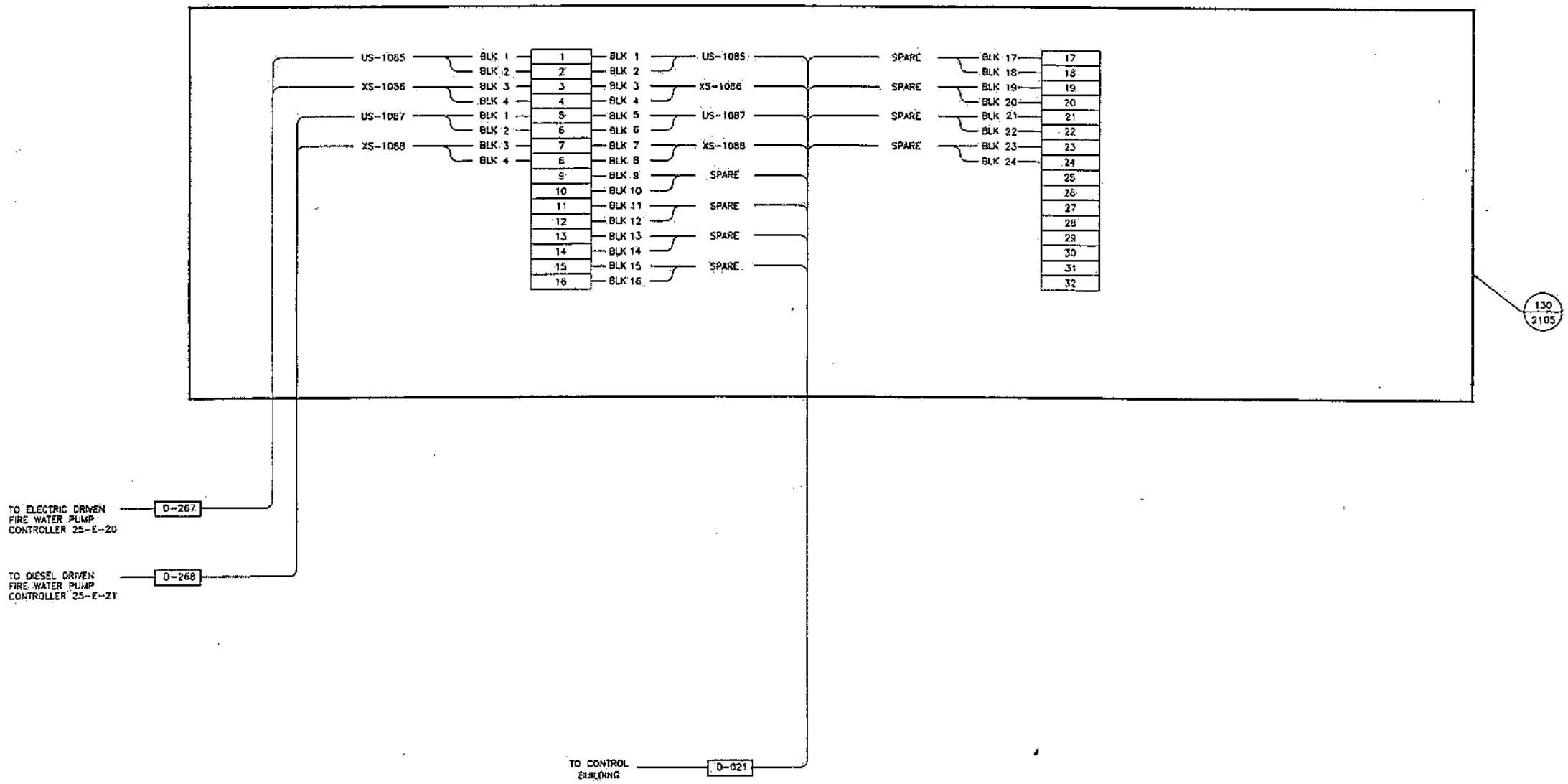

LEGEND
BLK - BLACK

REFERENCES		REVISIONS								
A1-25-EE-7501	INSTRUMENTATION CABLE SCHEDULE (DISCRETE)	2						FEB 05 1998	AS-BUILT	
A1-25-EE-6112	FIRE PUMP SHELTER	1	LF	IT	HL	FOD	DC	93.02.11	ISSUED FOR CONSTRUCTION	
A1-25-EE-6101	OFFICE, CONTROL & SWGR. BLDG. AREA	0	LF	CF	HL	FOD	SP	92.11.23	ISSUED FOR APPROVAL	
DRAWING No	DESCRIPTION	No	BY	CHK	LEAD	SEC	PRJ	DATE	DESCRIPTION	

APPROVALS		DATE
DESIGN	C. FAGEA	NOV.92
DRAWN	LF	NOV.92
CHECKED	I. TEDEROOT	NOV.92
LEAD	H. LESKIW	NOV.92
SECTION HEAD	F. OTSHANGA	NOV.92
PROJECT	S. PANT	92.11.23
CLIENT		

ENGINEER STAMP

PERMIT STAMP

Propipe

Lavalin International Inc

DRAWING No

KENYA PIPELINE COMPANY LIMITED

WEST KENYA PIPELINE EXTENSION PROJECT
NAKURU TERMINAL No. 25
TERMINAL BOX DTB-5
WIRING DIAGRAM

JOB No 49957
ACCOUNT No 4600
SCALE NTS
REV 2

DWG. No. A1-25-EE-7610 Filename : 25EE7610

January 1991 KENYA

A1 841 x 594

FIELD TERMINAL BOX NO. ATB-1

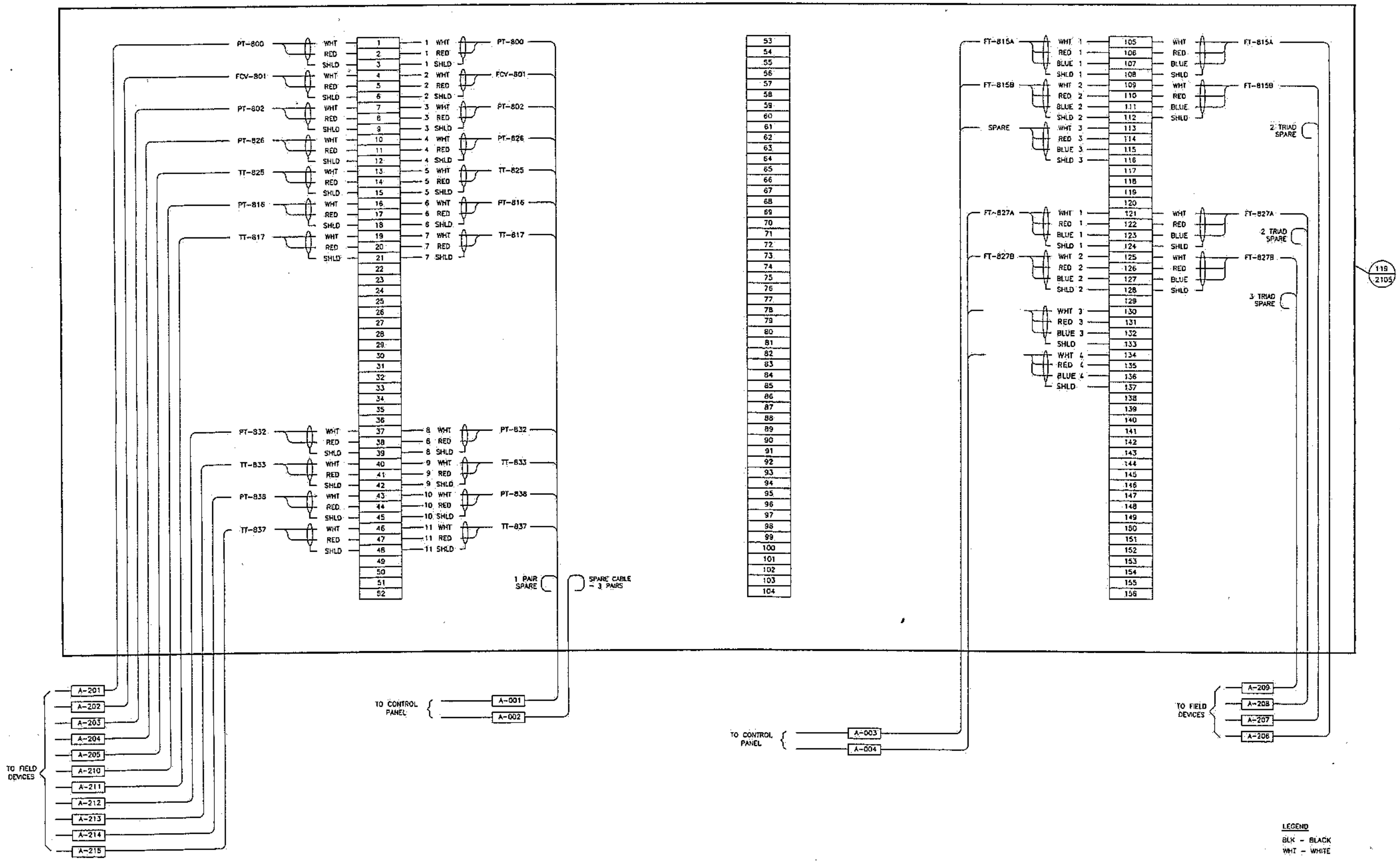

REFERENCES	
A1-25-EE-7304	INSTRUMENTATION CABLE SCHEDULE (ANALOG)
A1-25-EE-7303	INSTRUMENTATION CABLE SCHEDULE
DRAWING No	DESCRIPTION

REVISIONS							
4						FEB 0 6 1995	AS-BUILT, REVISED
3							AS-BUILT
2	VN	IT	HL	FOO	OJ	93.05.07	REVISED - ISSUED FOR CONSTRUCTION
1	LF	IT	HL	FOO	DC	93.02.11	ISSUED FOR CONSTRUCTION
0	LF	CF	HL	FOO	SP	92.11.23	ISSUED FOR APPROVAL
No	BY	CHK	LEAD	SEC	PRJ	DATE	DESCRIPTION

APPROVALS	DATE
DESIGN C. KACCA	NOV.92
DRAWN LF	NOV.92
CHECKED J. TEWKROT	NOV.92
LEAD H. LESIRW	NOV.92
SECTION HEAD F. O'DONNELL	NOV.92
PROJECT S. PANT	92.11.23
CLIENT	

ENGINEER STAMP

PERMIT STAMP

Propipe

Lavalin International Inc

DRAWING No

KENYA PIPELINE COMPANY LIMITED

WEST KENYA PIPELINE EXTENSION PROJECT
NAKURU TERMINAL No. 25
TERMINAL BOX ATB-1
WIRING DIAGRAM

JOB No 49957
ACCOUNT No 4600
SCALE NTS
REV 4

DWG. No. A1-25-EE-7612 Filename : 25EE7612

A1 841 x 594

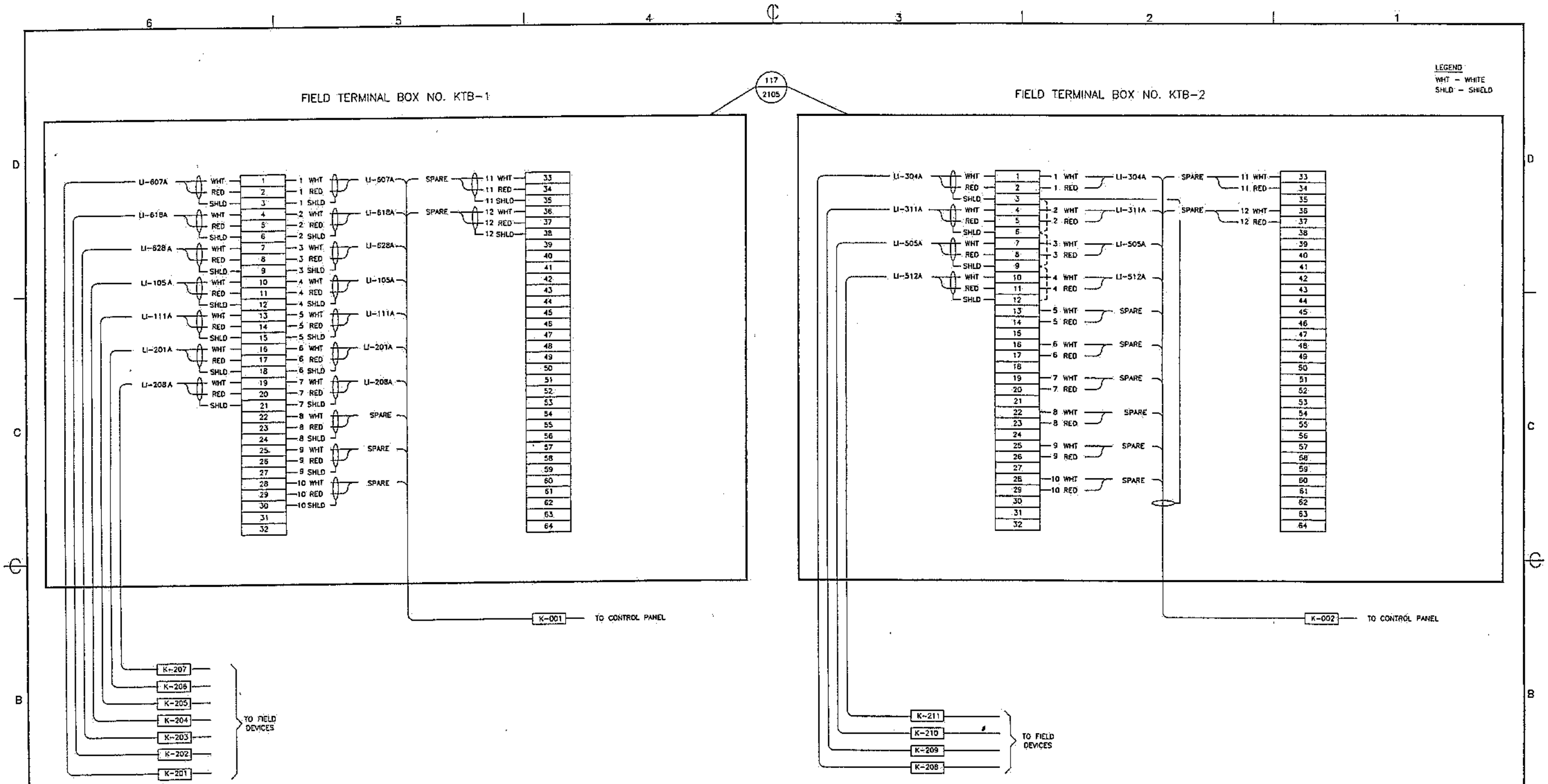

REFERENCES	
A1-27-EE-7304	INSTRUMENTATION CABLE SCHEDULE (COMMUNICATION)
DRAWING No	DESCRIPTION

REVISIONS								
2							FEB 11 6 1995	AS-BUILT
1	LF	JT	HL	FOO	DC	93.02.11		ISSUED FOR CONSTRUCTION
0	LF	CF	HL	FOO	SP	92.11.23		ISSUED FOR APPROVAL
No	BY	CHK	LEAD	SEC	PRJ	DATE		DESCRIPTION

APPROVALS	DATE
DESIGN C. FACCA	NOV 92
DRAWN LF	NOV 92
CHECKED I. TOCKBOTT	NOV 92
LEAD H. LESKIW	NOV 92
SECTION HEAD F. O'DONNELL	NOV 92
PROJECT T. HUNT	92.11.23
CLIENT	

ENGINEER STAMP

PERMIT STAMP

Propipe

Lavalin International Inc

DRAWING No

KENYA PIPELINE COMPANY LIMITED

WEST KENYA PIPELINE EXTENSION PROJECT
NAKURU TERMINAL No. 25
TERMINAL BOXES KTB-1 & KTB-2
WIRING DIAGRAM

JOB No 49957
ACCOUNT No. 4600
SCALE NTS
REV 2

DWG. No. A1-25-EE-7615 Filename : 25EE7615

A1-841 x 594

January 1991 KENYA41

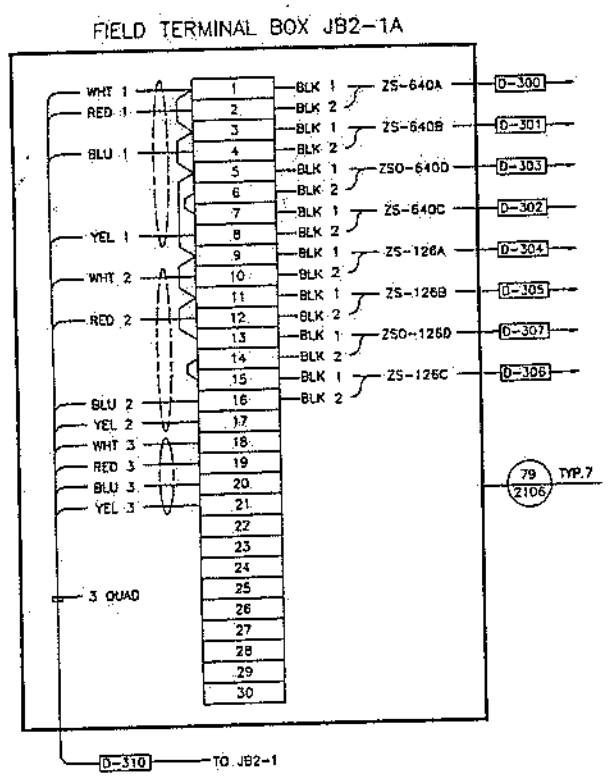

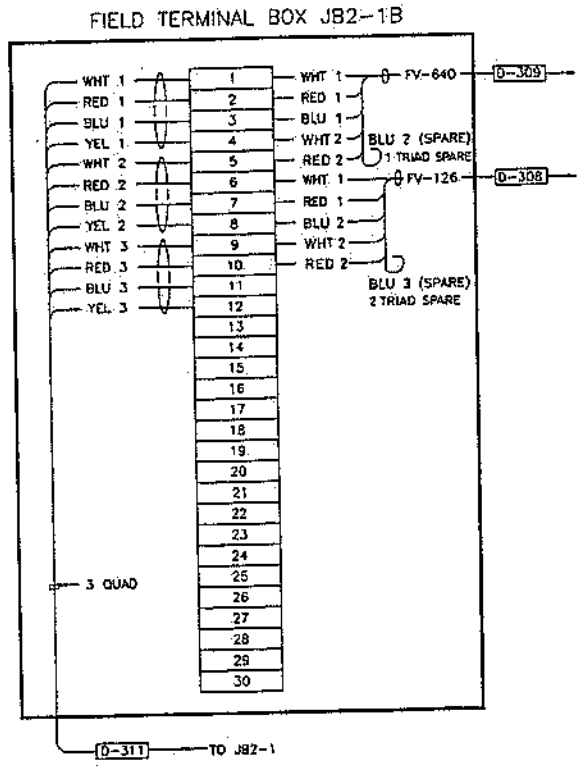

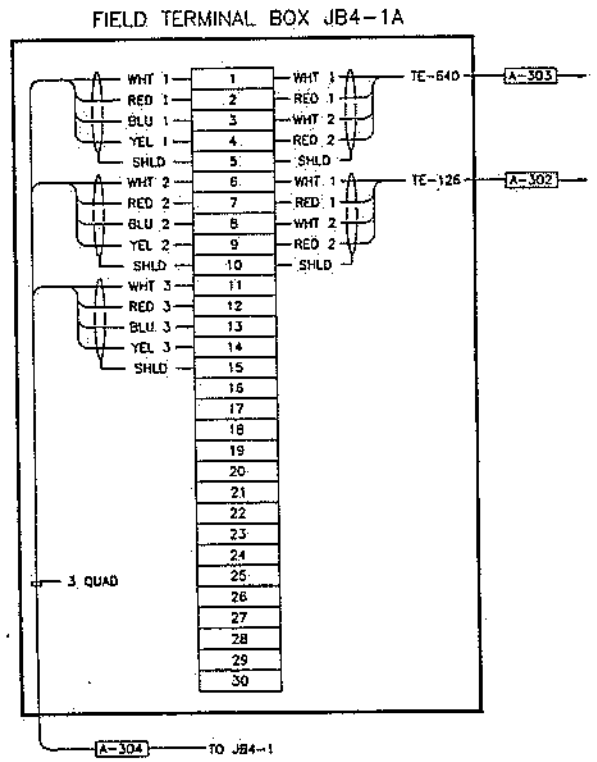

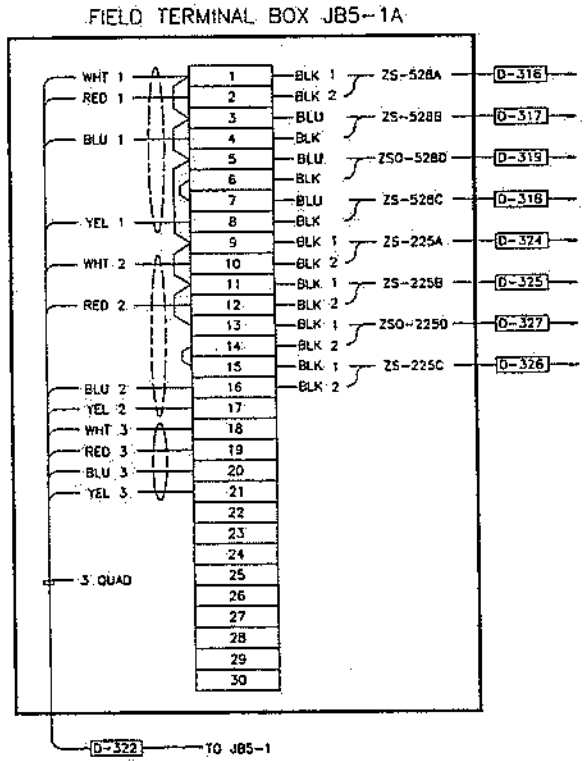

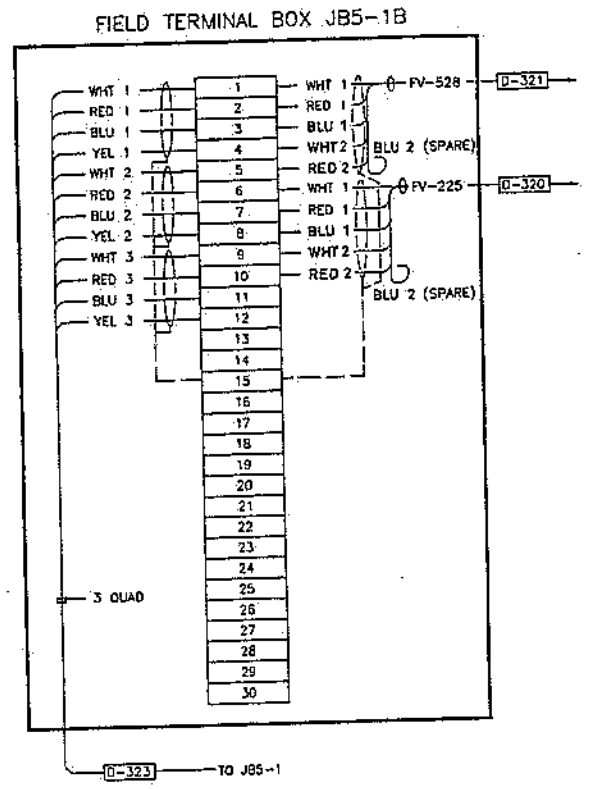

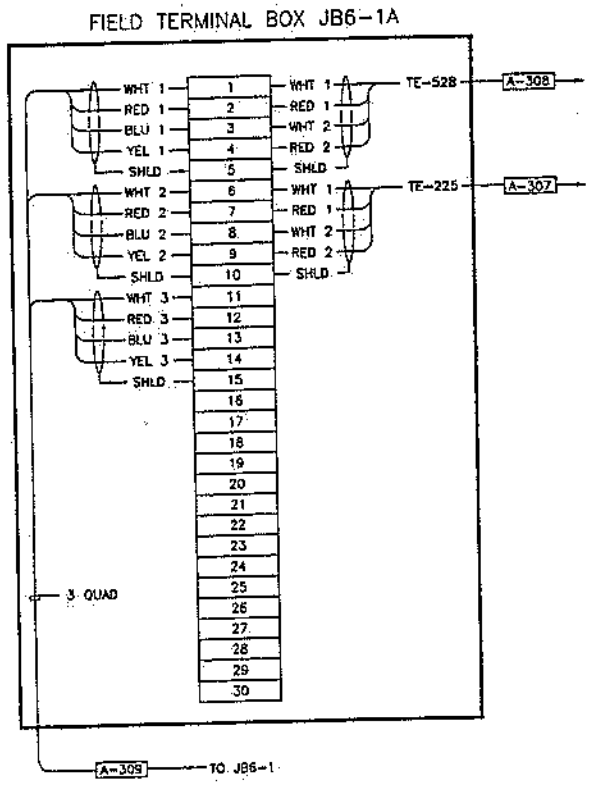

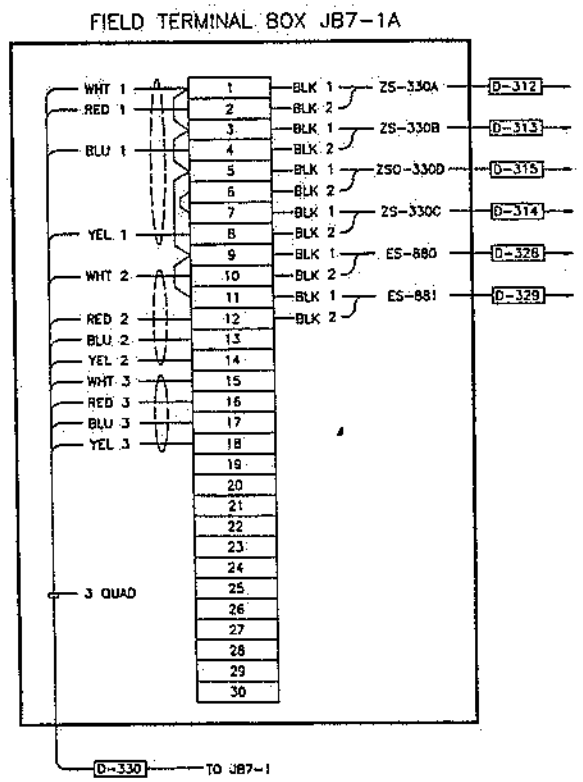

ISLAND #1

REFERENCES	
A1-25-EE-7302/3	INSTRUMENTATION CABLE SCHEDULE
A1-25-EE-6202	TRUCK LOADING SHELTER, ISLAND No.1
DRAWING No	DESCRIPTION

REVISIONS No	BY	CHK	LEAD	SEC	PRJ	DATE	DESCRIPTION
3						FEB 06 1995	AS-BUILT, REVISED
2							AS-BUILT
1	LF	IT	HL	FDO	DC	93.02.11	ISSUED FOR CONSTRUCTION
0	VN	BJ	HL	FDO	SMP	92.11.26	ISSUED FOR APPROVAL

APPROVALS		DATE
DESIGN	B. JACK	NOV.92
DRAWN	V. NGUYEN	NOV.92
CHECKED	I. TOUBROUT	NOV.92
LEAD	H. LESKIW	NOV.92
SECTION HEAD	P. O'DONNELL	NOV.92
PROJECT	S. PANT	92.11.26
CLIENT		

ENGINEER STAMP

PERMIT STAMP

Propipe

Lavalin International Inc

DRAWING No

KENYA PIPELINE COMPANY LIMITED

WEST KENYA PIPELINE EXTENSION PROJECT
NAKURU TERMINAL No. 25
TERMINAL BOX JB2-1A/1B,4-1A,5-1A/1B
6-1A,7-1A WIRING DIAGRAM

JOB No 49957
ACCOUNT No 4600
SCALE NTS
REV 3

DWG. No. A1-25-EE-7617 Filename : 25EE7617

A1 841 x 594

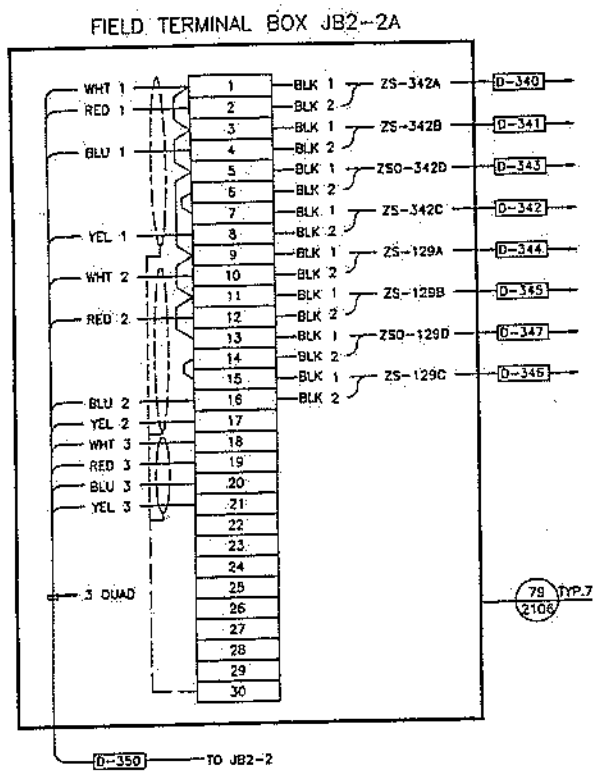

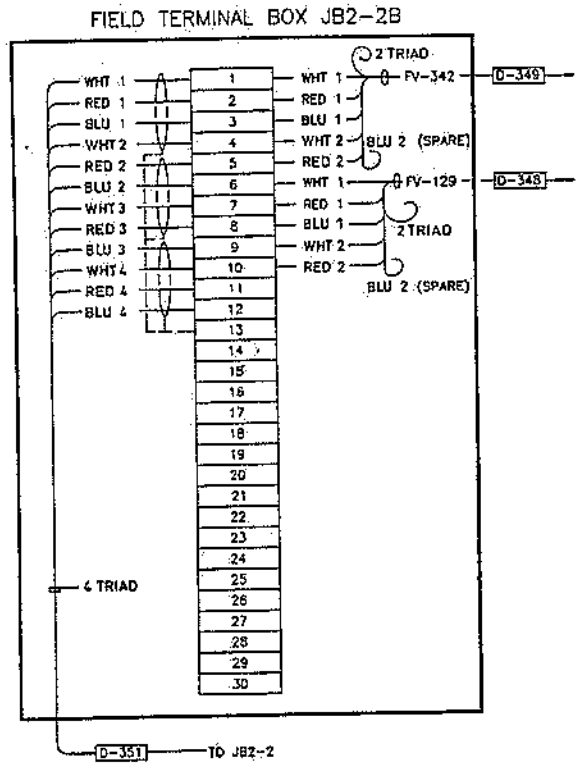

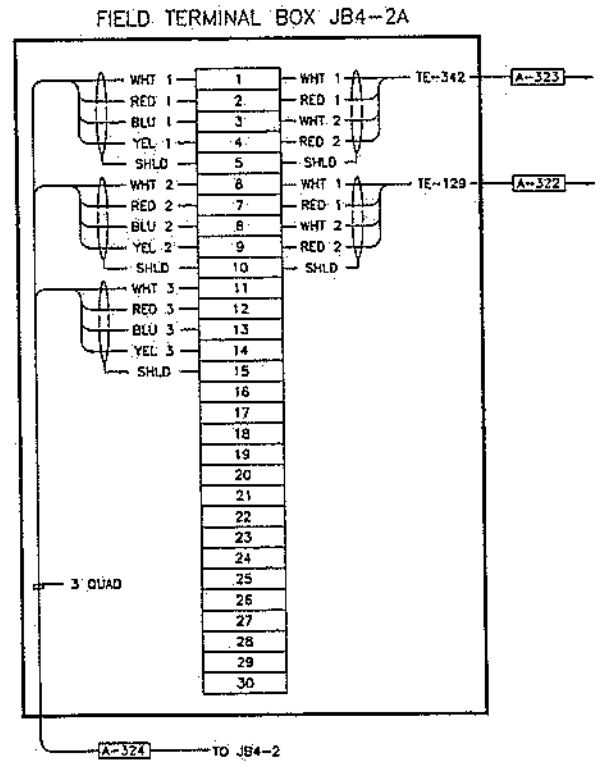

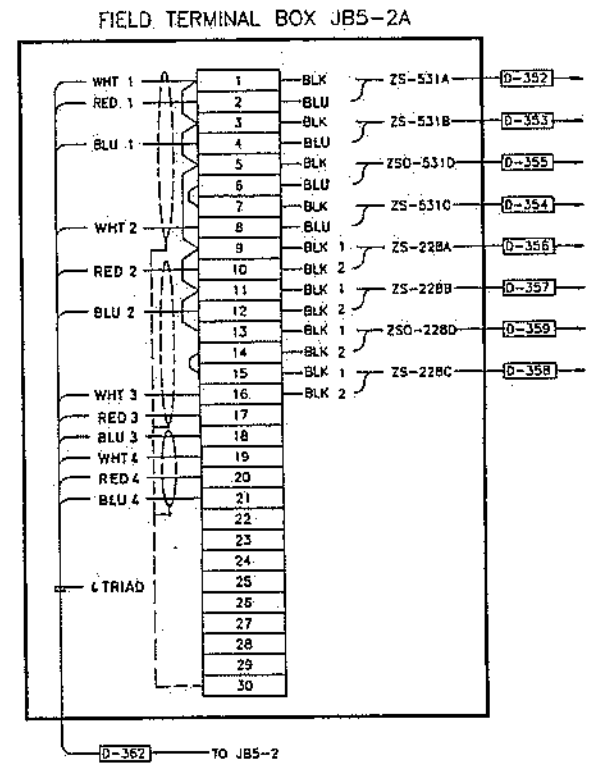

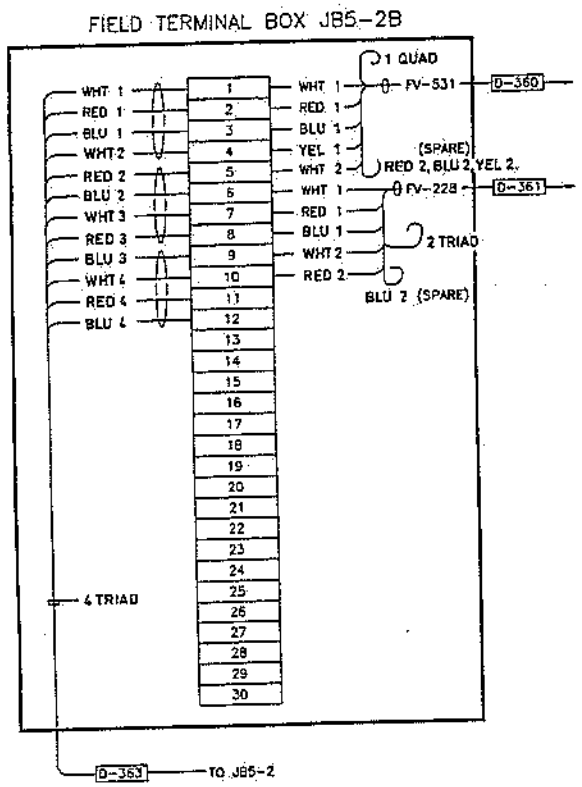

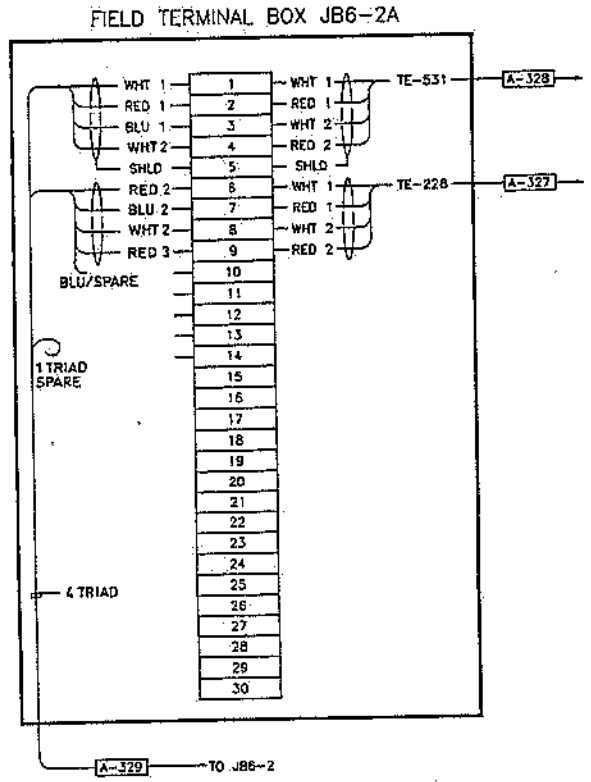

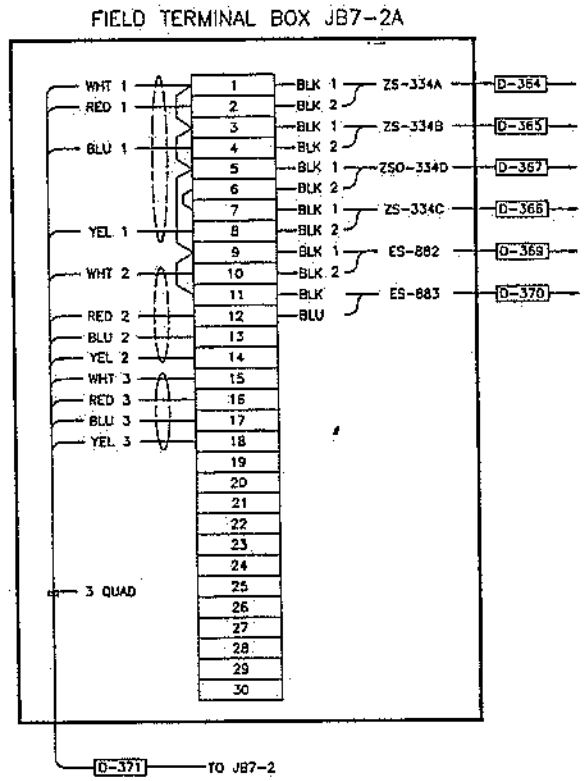

ISLAND #2

REFERENCES	
A1-25-EE-7302/3	INSTRUMENTATION CABLE SCHEDULE
A1-25-EE-6203	TRUCK LOADING SHELTER, ISLAND No.2
DRAWING No	DESCRIPTION

REVISIONS								
3							FEB 06 1996	AS-BUILT, REVISED
2								AS-BUILT
1	LF	IS	HL	FOD	DC	SMP	93.02.11	ISSUED FOR CONSTRUCTION
0	VN	BJ	HL	FOD	SMP	PRJ	92.11.26	ISSUED FOR APPROVAL
No	BY	CHK	LEAD	SEC	PRJ	DATE	DESCRIPTION	

APPROVALS		DATE
DESIGN	B. JACK	NOV.92
ORIGIN	V. HOUVEN	NOV.92
CHECKED	L. TEDCROFF	NOV.92
LEAD	H. LESKIW	NOV.92
SECTION HEAD	T. O'DONNELL	NOV.92
PROJECT	S. PANT	92.11.26
CLIENT		

ENGINEER STAMP

PERMIT STAMP

Propipe

Lavalin International Inc

DRAWING No

KENYA PIPELINE COMPANY LIMITED

WEST KENYA PIPELINE EXTENSION PROJECT
NAKURU TERMINAL No. 25
TERMINAL BOX JB2-2A/2B,4-2A,5-2A/2B,
6-2A,7-2A WIRING DIAGRAM

JOB No 49957
ACCOUNT No 4600
SCALE NTS
REV 3

DWG. No. A1-25-EE-7618 Filename : 25EE7618

A1 841 x 594